13-compartment BASIC letterbox system – flush-mounted – choice of RAL colour

Product number BML3D-HT1BR9TH4C

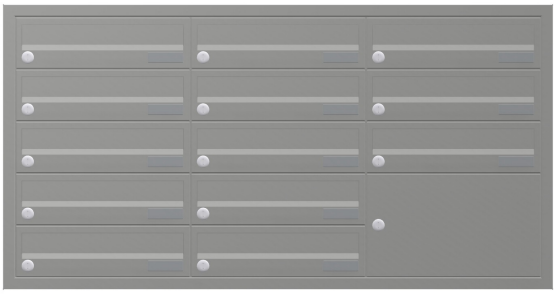

Product description

Welcoming design and convenient everyday mail delivery

The BASIC Horizontal system from Briefkasten Manufaktur welcomes you and your visitors with a clean, uncluttered design. Its modular construction brings your chosen functions together in a well-organised, customisable solution for everyday use. The BASIC series offers letterboxes, accessory boxes and functional boxes that can be combined in various ways to create a harmonious entrance area. The system is designed for flush mounting and provides 13 letterboxes for daily mail.

The system is finished in your choice of RAL colour and has overall dimensions of W 1162 × H 605 × D 394 mm.

Select “Configure now” to open this exact configuration in the 3D configurator. You can then customise the system further and place your order.

Individually configurable

Create a letterbox system to suit your home: select “Configure now” to adapt this configuration to your requirements.

- Box finish: customise the colour in the 3D configurator using the colours available for this version.
- Personalised lettering: add your own names, house numbers or wording to the designated areas. Any lettering shown is for illustration and can be replaced.
- Lettering style: choose from the fonts available for lettering and adjust the appearance in the configurator.
- Equipment: add or change compatible components from the options available for the system.

When you make changes, the dimensions and price are recalculated in the 3D configurator to match your selections.

Plaster trim frame

The flush-mounted system is equipped with a plaster trim frame made from 1,5 mm thick V2A stainless steel. The frame covers the junction between the installation opening and the wall surface, creating a neat finish.

Briefkasten Manufaktur Lippe GmbH
Werler Straße 60
32105 Bad Salzuflen

www.briefkasten-manufaktur.de
info@briefkasten-manufaktur.de
Tel.: +49 5222 807110

Geschäftsführer Oliver Woineck
Ust.ID.Nr. DE303690847
Handelsregister Amtsgericht Lemgo, HRB 8618

Materials and workmanship

Base material: V2A 1.4301 stainless steel. The V2A stainless steel provides a corrosion-resistant, durable foundation for the entrance area.

The powder-coated surface is finished in your choice of RAL colour. Select your preferred colour in the 3D configurator.

Letterbox and ease of use

Letterbox 370 × 110 × 385 mm: includes a rainwater run-off edge for optimum protection against water, a continuous rubber lip for quiet mail delivery, a sturdy replaceable nameplate and a highly robust lock. The posting height and a narrowing of the chute nevertheless protect the mail against unauthorised removal.

Equipment

BASIC plastic nameplate, type 2: nameplate made from crystal-clear polycarbonate. The insert can be replaced from the front.

Features of this letterbox system

- Product range: BASIC Horizontal
- Mounting: flush mounting
- Finish: choice of RAL colour
- Overall dimensions: W 1162 × H 605 × D 394 mm
- 13 letterboxes, 1 accessory box
- Box finish: choice of RAL colour
- Base material: V2A 1.4301 stainless steel. Finish: powder coating or brushed stainless steel

Important information:

Water protection: a sheltered location, ideally beneath a canopy, helps protect your mail. Mail should be inserted fully and the letter flap should be closed.

Installation: check the mounting surface and installation conditions against the overall dimensions and installation instructions.

Product properties

Series	BASIC
Name labelling	Nameplate
Material	Stainless steel V2A 1.4301
Removal of mail	On the front
Surface/colour	RAL of your choice (according to colour table)
Number of boxes	with 13 letterboxes
Mounting type	Flush-mounted

Briefkasten Manufaktur Lippe GmbH
Werler Straße 60
32105 Bad Salzuflen

www.briefkasten-manufaktur.de
info@briefkasten-manufaktur.de
Tel.: +49 5222 807110

Geschäftsführer Oliver Woineck
Ust.ID.Nr. DE303690847
Handelsregister Amtsgericht Lemgo, HRB 8618

Dimensions

Height of single box in mm	110
Width of single box in mm	370
Overall height in mm	605
Total width in mm	1162
Depth in mm	394

Dimension drawing

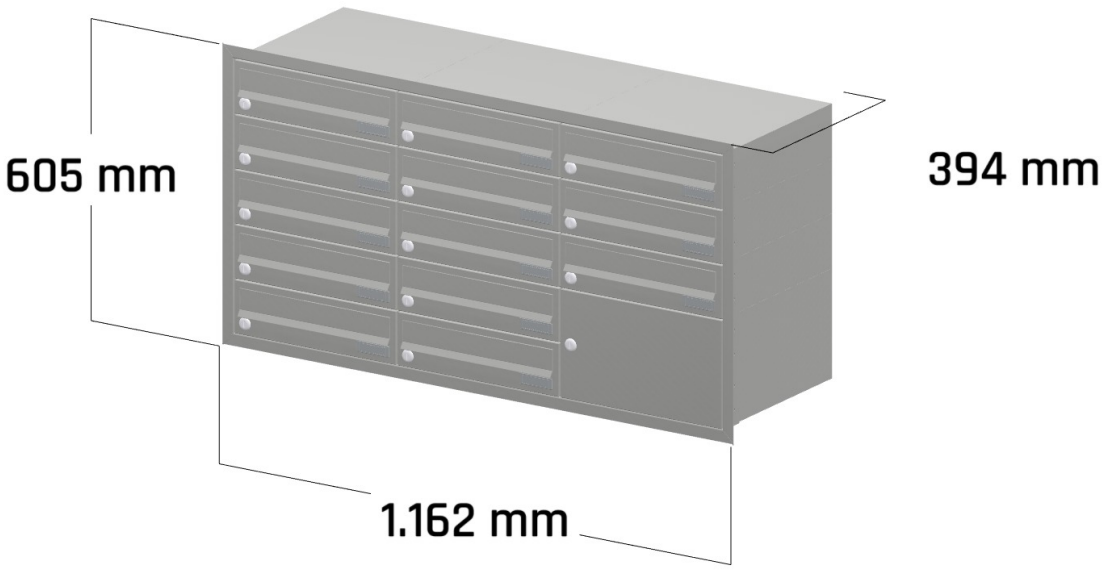

Briefkasten Manufaktur Lippe GmbH
Werler Straße 60
32105 Bad Salzuflen

www.briefkasten-manufaktur.de
info@briefkasten-manufaktur.de
Tel.: +49 5222 807110

Geschäftsführer Oliver Woineck
Ust.ID.Nr. DE303690847
Handelsregister Amtsgericht Lemgo, HRB 8618

More images



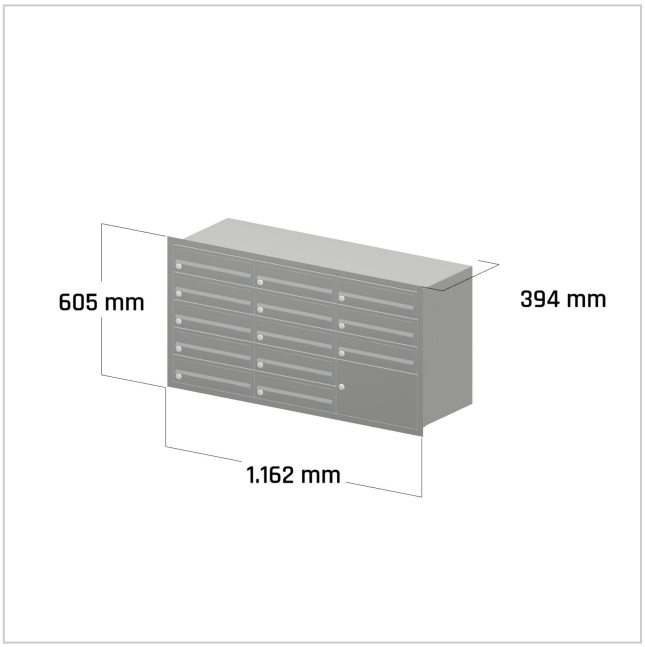

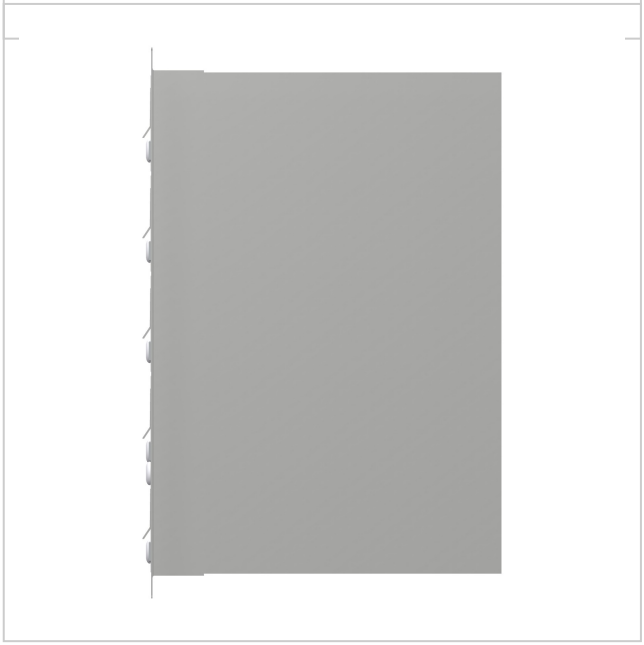

Briefkasten Manufaktur Lippe GmbH
Werler Straße 60
32105 Bad Salzuflen

www.briefkasten-manufaktur.de
info@briefkasten-manufaktur.de
Tel.: +49 5222 807110

Geschäftsführer Oliver Woineck
Ust.ID.Nr. DE303690847
Handelsregister Amtsgericht Lemgo, HRB 8618