4er 2x2 stainless steel fence letterbox BASIC Plus 382XZ - RAL of your choice - removal from the rear | ? Colour of your choice | with 4 mailboxes (2x2)



Product number 382XAZ-4

Product description

4er 2x2 stainless steel fence letter box BASIC Plus 382XZ - RAL of your choice - removal from the rear

High-quality fence letterbox for 4 parties from Briefkasten Manufaktur. Mail is inserted from the front, residents can remove the mail from the back. The letter box can be attached to your fence using the optional bar mat attachment; if this is not selected, the letter box should be fitted and perforated by your fence builder. The complete fence letterbox is made of weather-resistant stainless steel V2A 1.4301, powder-coated in the RAL colour of your choice. A rain drainage edge for optimum water protection, a throw-in flap with rubber buffer, the solid interchangeable nameplate, a practical post holder and the very robust lock characterise this stainless steel letterbox.

The letterbox systems in the BASIC Plus collection are characterised by the consistent use of V2A stainless steel. The result is a very long service life and sustainability. The design has been developed by our own engineers with a view to high flexibility and modularity, simple spare parts assembly and uncomplicated self-assembly. Spare parts are directly available for all BASIC Plus systems.

- 4-post fence mailbox made of stainless steel V2A 1.4301, powder-coated in RAL colour.
- The system is manufactured by Briefkasten Manufaktur. German quality production "Made in Germany".
- The letterboxes comply with DIN/EN 13724. Insertion size (3.5 cm x 32.5 cm) for C4 landscape, large letters also fit in here without creasing.
- Insertion flap with sound-absorbing rubber seal for very quiet mail insertion.
- The door can be opened from left to right.
- Incl. 2 keys with key number, interchangeable nameplate (type 2) under the flap and post holder.
- Incl. side cladding + rain cover made of V2A stainless steel, powder-coated in RAL colour.
- Suitable for fence mounting, fixing holes must be made on site. Optionally with bar mat holder.

Briefkasten Manufaktur Lippe GmbH
Werler Straße 60
32105 Bad Salzuflen

www.briefkasten-manufaktur.de
info@briefkasten-manufaktur.de
Tel.: +49 5222 807110

Geschäftsführer Oliver Woineck
Ust.ID.Nr. DE303690847
Handelsregister Amtsgericht Lemgo, HRB 8618

Important information:

The post is only protected against moisture and dirt when it is fully inserted and the flap is closed. Under certain extreme weather conditions, water may still enter (up to 1ccm according to DIN EN 13724). This is not a reason for complaint.

Product properties

Surface/colour	RAL 9005 deep black, RAL 3004 crimson red, DB 703 iron mica, RAL 7016 anthracite grey, RAL of your choice (according to colour table), RAL 9007 grey aluminium, RAL 9016 traffic white
Series	BASIC
Boxes by volume	Normal > 10 litres
Number of boxes	with 4 letterboxes
Name labelling	Nameplate
Material	Stainless steel V2A 1.4301
Mounting type	Fence
Removal of mail	On the back

Briefkasten Manufaktur Lippe GmbH
Werler Straße 60
32105 Bad Salzuflen

www.briefkasten-manufaktur.de
info@briefkasten-manufaktur.de
Tel.: +49 5222 807110

Geschäftsführer Oliver Woineck
Ust.ID.Nr. DE303690847
Handelsregister Amtsgericht Lemgo, HRB 8618

Dimensions

Height of single box in mm	330,0
Width of single box in mm	355,0
Capacity in litres	12
Height of letterbox slot in mm	35,0
Width of letter slot in mm	325,0
Height of letterbox in mm	660,0
Width of letterbox system in mm	710,0
Depth in mm	100.0 + 24.0 Rain roof
Weight in kg	23
Delivery condition	System is delivered pre-assembled/partially disassembled

Briefkasten Manufaktur Lippe GmbH
Werler Straße 60
32105 Bad Salzuflen

www.briefkasten-manufaktur.de
info@briefkasten-manufaktur.de
Tel.: +49 5222 807110

Geschäftsführer Oliver Woineck
Ust.ID.Nr. DE303690847
Handelsregister Amtsgericht Lemgo, HRB 8618

Dimension drawing

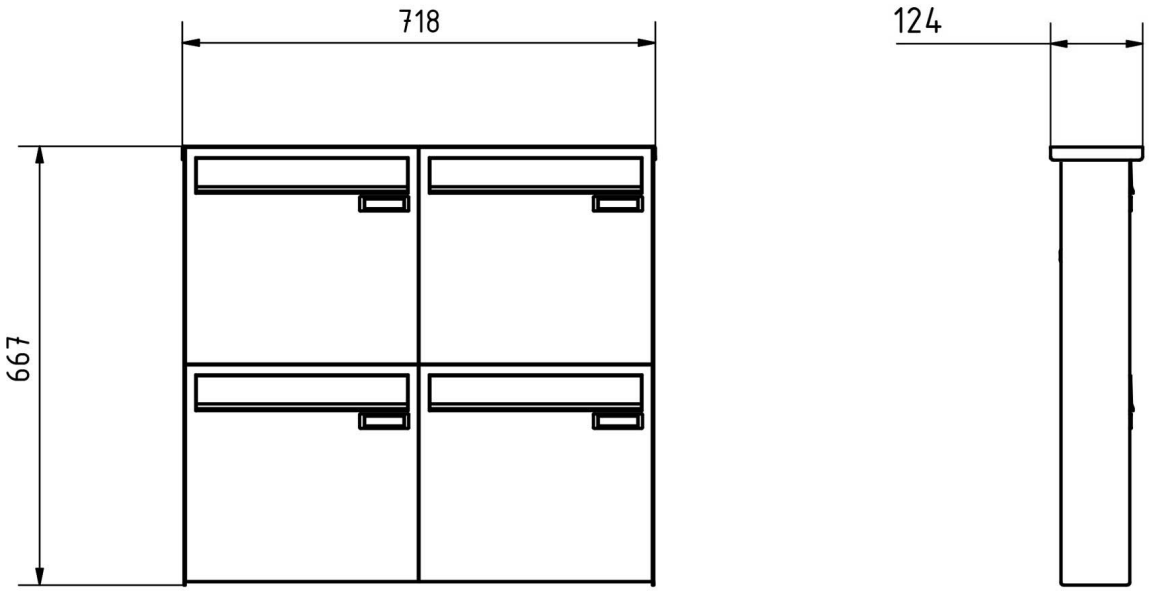

Briefkasten Manufaktur Lippe GmbH
Werler Straße 60
32105 Bad Salzuflen

www.briefkasten-manufaktur.de
info@briefkasten-manufaktur.de
Tel.: +49 5222 807110

Geschäftsführer Oliver Woineck
Ust.ID.Nr. DE303690847
Handelsregister Amtsgericht Lemgo, HRB 8618

More images









Briefkasten Manufaktur Lippe GmbH
Werler Straße 60
32105 Bad Salzuflen

www.briefkasten-manufaktur.de
info@briefkasten-manufaktur.de
Tel.: +49 5222 807110

Geschäftsführer Oliver Woineck
Ust.ID.Nr. DE303690847
Handelsregister Amtsgericht Lemgo, HRB 8618









Briefkasten Manufaktur Lippe GmbH
Werler Straße 60
32105 Bad Salzuflen

www.briefkasten-manufaktur.de
info@briefkasten-manufaktur.de
Tel.: +49 5222 807110

Geschäftsführer Oliver Woineck
Ust.ID.Nr. DE303690847
Handelsregister Amtsgericht Lemgo, HRB 8618



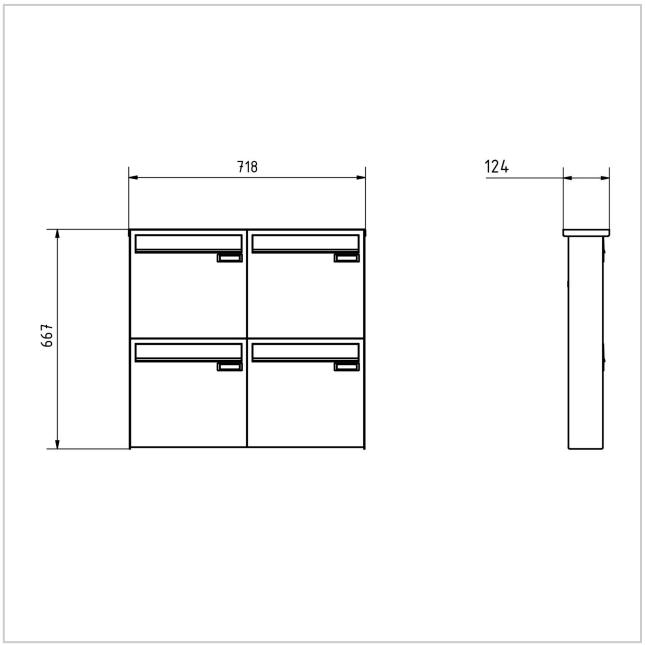

Briefkasten Manufaktur Lippe GmbH
Werler Straße 60
32105 Bad Salzuflen

www.briefkasten-manufaktur.de
info@briefkasten-manufaktur.de
Tel.: +49 5222 807110

Geschäftsführer Oliver Woineck
Ust.ID.Nr. DE303690847
Handelsregister Amtsgericht Lemgo, HRB 8618