6-unit 2x3 freestanding mailbox system Design BASIC 385220 7016 ST-R - RAL 7016 anthracite grey | RAL 7016 Anthracite grey, fine texture, matt | with 6 mailboxes (3x2) | 300x220x385 mm (WxHxD) - ???? Large 25 litres



Product number 385220-7016-6W

Product description

Freestanding mailbox system BASIC 385220 for 6 households – wide version – RAL 7016 Anthracite grey

The BASIC 385220 is designed as an especially spacious freestanding mailbox solution for 6 households. Approximately 25 litres of volume per mailbox provide ample space for daily mail, magazines and larger consignments.

The mailboxes are made of galvanised steel and powder-coated in RAL 7016 Anthracite grey, fine-textured matt. The rain hood and side cladding join the individual mail compartments into a cohesive, linear overall unit.

The wide W configuration distributes the mail compartments across several columns and creates a lower-looking, clear front for multiple users.

Each compartment has a 35 × 265 mm aperture for DIN C4 items in portrait format. A noise-damping rubber lip reduces impact noise; mail is retrieved from the front via doors that open from left to right. Each mailbox includes two keys with key number and a changeable nameplate.

Advantages of the BASIC 385220 at a glance

Massive stainless steel support posts

Round-tube support posts of approx. 60 mm diameter in brushed stainless steel V2A 1.4301 form a stable base for the freestanding mailbox system. The robust construction is designed for permanent use at the property entrance.

Large-capacity 220 mm version

Briefkasten Manufaktur Lippe GmbH
Werler Straße 60
32105 Bad Salzuflen

www.briefkasten-manufaktur.de
info@briefkasten-manufaktur.de
Tel.: +49 5222 807110

Geschäftsführer Oliver Woineck
Ust.ID.Nr. DE303690847
Handelsregister Amtsgericht Lemgo, HRB 8618

With approx. 300 × 220 × 385 mm per mailbox, the BASIC 385220 offers around 25 litres of mail volume. This is particularly practical for higher mail volumes or longer collection intervals.

Large aperture to DIN EN 13724

The aperture measuring 35 × 265 mm is designed for DIN C4 items in portrait format. Larger envelopes can be deposited without being folded.

Screw mounting or casting into concrete

Depending on the version, the stainless steel support posts are either bolted to a suitable foundation or permanently cast into concrete. This allows the unit to be installed to suit the site conditions.

Robust large-capacity unit Made in Germany

The combination of galvanised steel, large 25-litre mail compartments, massive stainless steel support posts and an installation-friendly construction makes the BASIC 385220 an especially robust solution for daily use.

Equipment of the BASIC 385220 mailbox system

Mailbox system

Number of mailboxes 6 separately usable mail compartments
Design Wide, multi-column freestanding unit
Mailbox material Galvanised steel
Finish RAL 7016 Anthracite grey, fine-textured matt
Mailbox size Approx. 300 × 220 × 385 mm per compartment
Mail volume Approx. 25 litres per mailbox
Manufacture Made in Germany by Briefkasten Manufaktur Lippe

Mail and operation

Aperture 35 × 265 mm, suitable for DIN C4 portrait
Aperture flaps With noise-damping rubber lip
Mail retrieval From the front
Door opening Left to right
Keys 2 keys with key number per mailbox
Nameplate Changeable nameplate below the aperture flap
Standard Mailboxes in accordance with DIN EN 13724

Support posts and equipment

Support posts Round tube approx. 60 mm in stainless steel V2A 1.4301, brushed
Mounting options Optionally for screw mounting or casting into concrete
Anchor bolts Not included with screw mounting; select separately to suit the foundation
Rain hood / side cladding Galvanised steel, powder-coated in RAL 7016 Anthracite grey, fine-textured matt

25 litres mail volume

Briefkasten Manufaktur Lippe GmbH
Werler Straße 60
32105 Bad Salzuflen

www.briefkasten-manufaktur.de
info@briefkasten-manufaktur.de
Tel.: +49 5222 807110

Geschäftsführer Oliver Woineck
Ust.ID.Nr. DE303690847
Handelsregister Amtsgericht Lemgo, HRB 8618

The BASIC 385220 uses the deep mailbox version with approx. 300 × 220 × 385 mm and around 25 litres of volume per compartment. The additional volume is particularly suitable for regular letter, magazine and catalogue deliveries as well as longer collection intervals.

Installation by casting into concrete

For the freestanding mailbox system we recommend a suitably dimensioned concrete foundation. The stainless steel support posts must be set plumb and permanently anchored in the foundation. Foundation size and embedment depth must be adapted to ground conditions, system weight and local circumstances.

Screw mounting on a foundation

For screw mounting a level and load-bearing concrete foundation is required. Suitable anchor bolts or equivalent fixings must be selected to suit the substrate and the loads on the unit. Anchor bolts are not included in the basic scope of delivery.

Note on weather protection

When items are fully inserted and the aperture flap is closed, mail is optimally protected against moisture and dirt. Protruding items can prevent the flap from closing completely. Under extreme weather conditions, moisture may enter the mailbox despite norm-compliant design.

Product properties

Material	Steel, galvanised
Series	BASIC
Number of boxes	with 6 letterboxes
Name labelling	Nameplate
Mounting type	Free-standing
Surface/colour	RAL 7016 anthracite grey, Brushed
Removal of mail	On the front
Boxes by volume	Large > 16 litres

Briefkasten Manufaktur Lippe GmbH
Werler Straße 60
32105 Bad Salzuflen

www.briefkasten-manufaktur.de
info@briefkasten-manufaktur.de
Tel.: +49 5222 807110

Geschäftsführer Oliver Woineck
Ust.ID.Nr. DE303690847
Handelsregister Amtsgericht Lemgo, HRB 8618

Dimensions

Height of single box in mm	220.0
Width of single box in mm	300.0
Capacity in litres	25
Height of letterbox slot in mm	35.0
Width of letter slot in mm	265.0
Height of letterbox in mm	440.0
Width of letterbox system in mm	900.0
Overall height in mm	1200.0 | 1500.0
Total width in mm	465.0
Depth in mm	435.0
Weight in kg	64
Delivery condition	Delivery is in blocks; Standelemente / mailbox delivered separately.

Dimension drawing

Briefkasten Manufaktur Lippe GmbH
Werler Straße 60
32105 Bad Salzuflen

www.briefkasten-manufaktur.de
info@briefkasten-manufaktur.de
Tel.: +49 5222 807110

Geschäftsführer Oliver Woineck
Ust.ID.Nr. DE303690847
Handelsregister Amtsgericht Lemgo, HRB 8618

Montagebohrungen

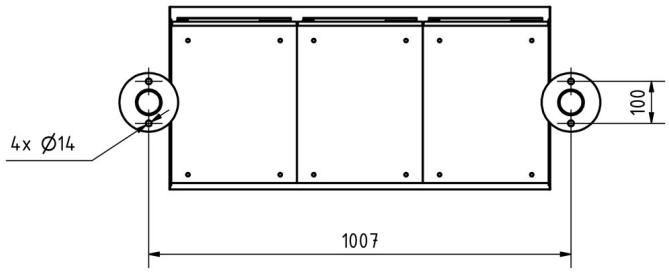

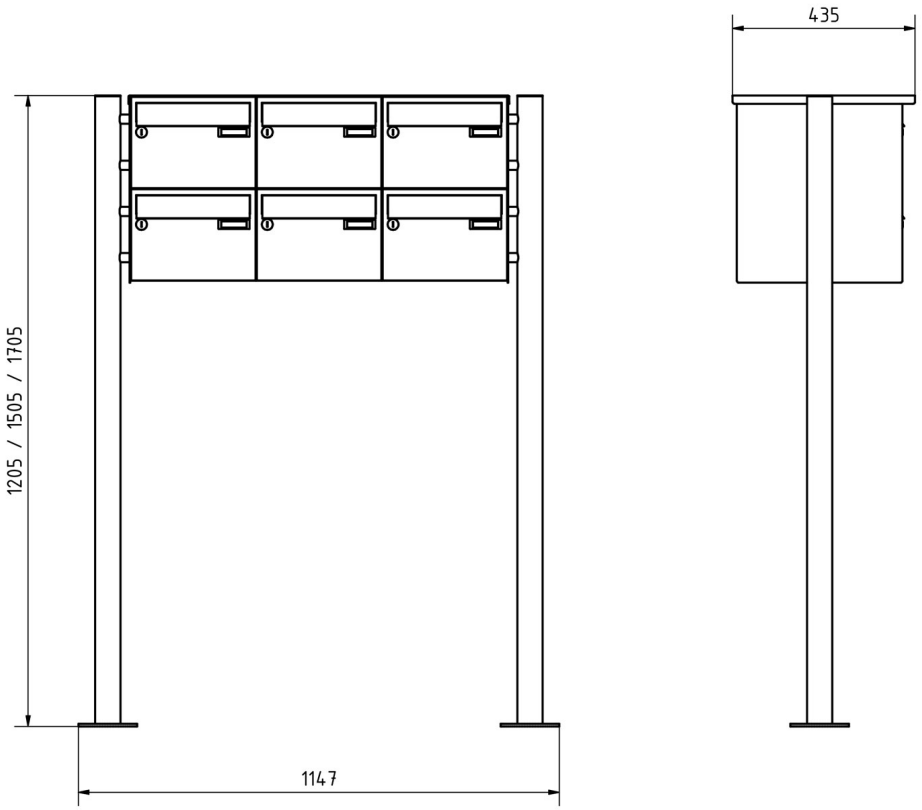

Briefkasten Manufaktur Lippe GmbH
Werler Straße 60
32105 Bad Salzuflen

www.briefkasten-manufaktur.de
info@briefkasten-manufaktur.de
Tel.: +49 5222 807110

Geschäftsführer Oliver Woineck
Ust.ID.Nr. DE303690847
Handelsregister Amtsgericht Lemgo, HRB 8618

More images

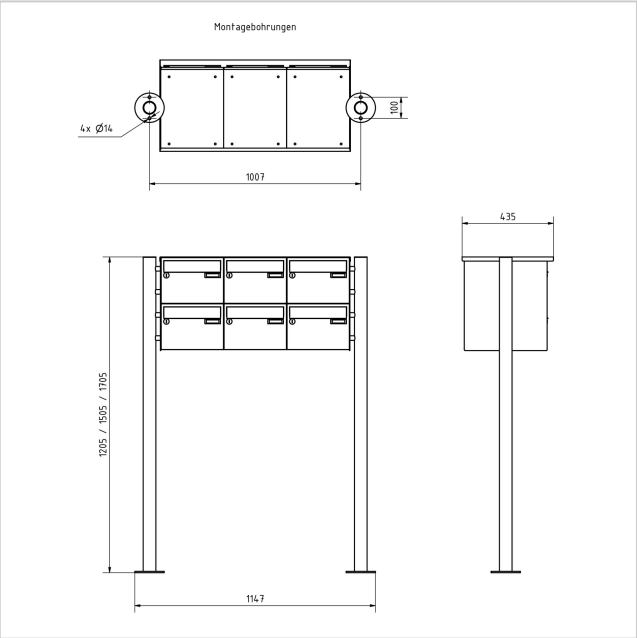







Briefkasten Manufaktur Lippe GmbH
Werler Straße 60
32105 Bad Salzuflen

www.briefkasten-manufaktur.de
info@briefkasten-manufaktur.de
Tel.: +49 5222 807110

Geschäftsführer Oliver Woineck
Ust.ID.Nr. DE303690847
Handelsregister Amtsgericht Lemgo, HRB 8618





Briefkasten Manufaktur Lippe GmbH
Werler Straße 60
32105 Bad Salzuflen

www.briefkasten-manufaktur.de
info@briefkasten-manufaktur.de
Tel.: +49 5222 807110

Geschäftsführer Oliver Woineck
Ust.ID.Nr. DE303690847
Handelsregister Amtsgericht Lemgo, HRB 8618