4?unit (2×2) designer freestanding letterbox GOETHE ST-Q – RAL colour of your choice | 100mm depth | with 4 mailboxes



Product number 215-STQ-4

Product description

4-unit (2x2) design freestanding mailbox GOETHE ST-Q - RAL of your choice

High-quality manufactured 4-party freestanding mailbox with elegant rectangular stand elements. The modern GOETHE mailbox is ideal for a sophisticated entrance area. The straight-lined design without a visible lock gives this mailbox a particularly elegant appearance.

The dimensions of the individual compartments provide a capacity of approx. 16 litres; the large aperture ensures that even DIN C4 envelopes and magazines, or mail after several days of absence, remain uncreased. The innovative push-key lock is concealed inside the mailbox. The key is simply inserted into the existing opening (no turning required) and the door opens. With the positioning of the lock, this mailbox is designed so that the retrieval door prevents the post from falling out towards you. Thanks to the drip edge, the internal post is optimally protected from the weather. The insertion flap is fitted with high-quality dampers to ensure quiet closing and to prevent disturbing rattling caused by weather. The interchangeable nameplates made of plexiglass can be conveniently accessed from the front; for an optimal appearance we recommend the flush-mounted nameplate with laser engraving (see Accessories). The second nameplate includes an 'Advertising Yes/No' insert.

The mailbox systems of the GOETHE collection are characterised by the consistent use of stainless steel and aluminium. The result is very high durability and sustainability. The construction has been developed by our own engineers with a view to high flexibility and modularity, easy spare-part assembly and straightforward self-assembly. Spare parts for all GOETHE systems are available directly in our shop.

Thanks to the design, self-assembly is straightforward.

Protected utility model according to DPMA file number DE: 20 2021 101 679.5

Briefkasten Manufaktur Lippe GmbH
Werler Straße 60
32105 Bad Salzuflen

www.briefkasten-manufaktur.de
info@briefkasten-manufaktur.de
Tel.: +49 5222 807110

Geschäftsführer Oliver Woineck
Ust.ID.Nr. DE303690847
Handelsregister Amtsgericht Lemgo, HRB 8618

- 4-unit freestanding mailbox made of stainless steel and aluminium.
- Mailboxes made from stainless steel 1.4016 (corrosion-resistant magnetic stainless steel), powder-coated in a RAL colour of your choice.
- Quality manufacture - Made in Germany by Briefkasten Manufaktur Lippe.
- Innovative push-key lock with 2 keys per compartment.
- Letters are inserted and retrieved from the front. Insertion flap fitted with high-quality dampers for very quiet posting of mail.
- The mailboxes comply with DIN/EN 13724. Insertion aperture (3.5 cm x 36.0 cm) for C4 landscape envelopes; large letters fit without creasing.
- Retrieval doors open from top to bottom. This prevents your post from falling out towards you.
- Plexiglass nameplate for name labelling and a second nameplate with 'Advertising Yes/No' per compartment.
- Optimal protection from rain thanks to drip edges and a rain hood made of 3 mm aluminium AlMg3 W19, powder-coated in a RAL colour of your choice.
- Side cladding made of 3 mm aluminium AlMg3 W19, powder-coated in a RAL colour of your choice.
- Rear panel made of 1 mm stainless steel V2A 1.4301, powder-coated in a RAL colour of your choice.
- The W 40 mm x D 80 mm support posts are made from 2 mm stainless steel V2A 1.4301, powder-coated in a RAL colour for either concrete in-ground fixing or screw mounting.

Important information:

To achieve optimal protection of your post from water, the mailbox or mailbox system should, if possible, be located under a canopy.

Postal items are only protected from water when they are placed completely inside the box and the insertion flap is closed. Partially inserted post allows moisture and dirt to enter the mailbox. This system is protected against water ingress in accordance with DIN EN 13724. Water ingress is not grounds for a complaint.

Product properties

Surface/colour	RAL 9005 deep black, RAL 3004 crimson red, DB 703 iron mica, RAL 7016 anthracite grey, RAL of your choice (according to colour table), RAL 9007 grey aluminium, RAL 9016 traffic white
Series	GOETHE
Number of boxes	with 4 letterboxes
Name labelling	Nameplate
Material	Aluminium AlMg3 W19, Stainless steel V2A 1.4301, Stainless steel 1.4016 (non-rusting magnetic stainless steel)
Mounting type	Free-standing
Removal of mail	On the front
Boxes by volume	Large > 16 litres

Briefkasten Manufaktur Lippe GmbH
Werler Straße 60
32105 Bad Salzuflen

www.briefkasten-manufaktur.de
info@briefkasten-manufaktur.de
Tel.: +49 5222 807110

Geschäftsführer Oliver Woineck
Ust.ID.Nr. DE303690847
Handelsregister Amtsgericht Lemgo, HRB 8618

Dimensions

Width in mm	1
Height in mm	1
Height of single box in mm	400,0
Width of single box in mm	400,0
Capacity in litres	16
Height of letterbox slot in mm	35,0
Width of letter slot in mm	360,0
Height of letterbox in mm	800,0
Width of letterbox system in mm	800,0
Overall height in mm	1200,0 | 1500,0 | 1700,0 + 23,0
Total width in mm	888,0
Depth in mm	100.0 + 25.0 Rain roof
Weight in kg	48
Delivery condition	Supplied in blocks, stand elements / letterbox divided

Dimension drawing

Briefkasten Manufaktur Lippe GmbH
Werler Straße 60
32105 Bad Salzuflen

www.briefkasten-manufaktur.de
info@briefkasten-manufaktur.de
Tel.: +49 5222 807110

Geschäftsführer Oliver Woineck
Ust.ID.Nr. DE303690847
Handelsregister Amtsgericht Lemgo, HRB 8618

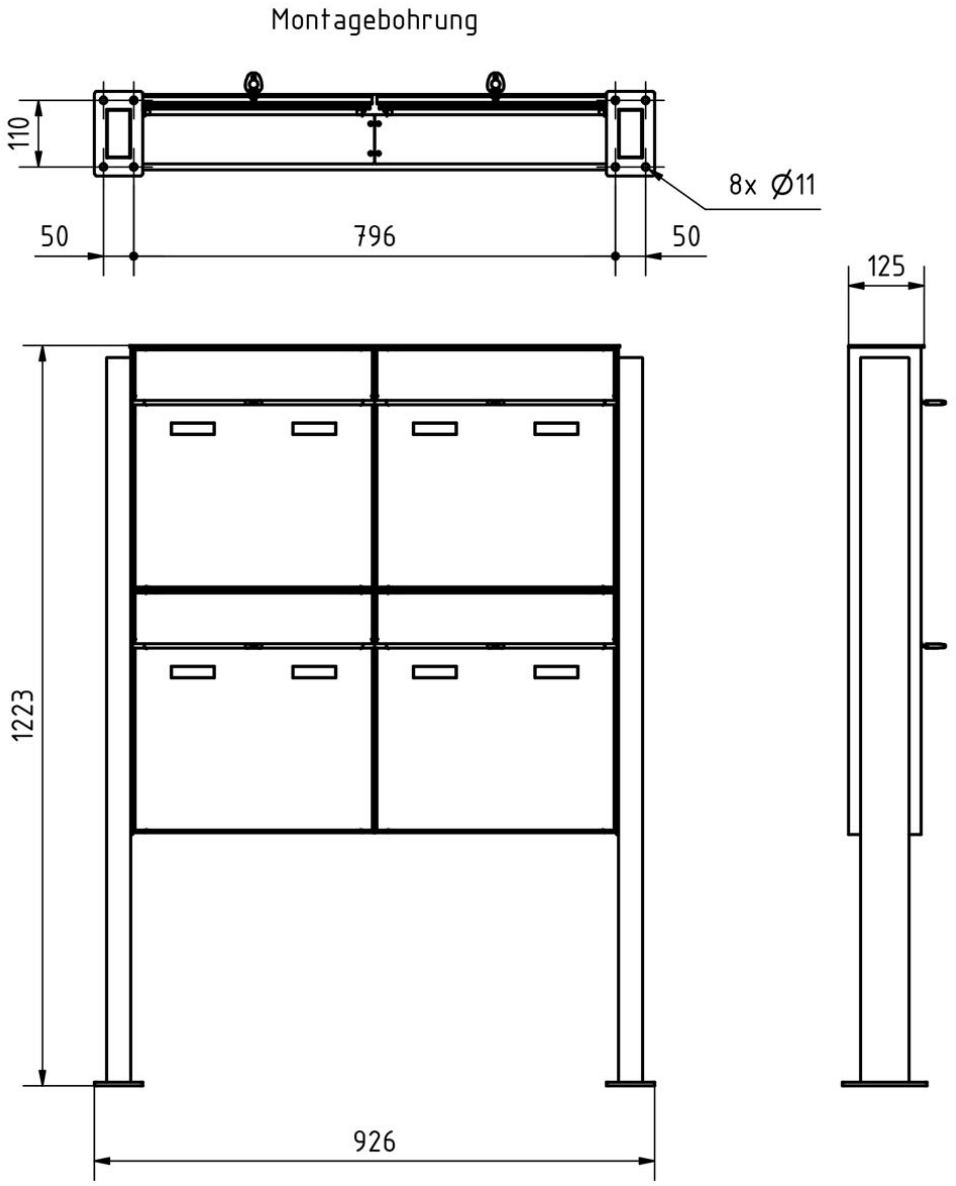

Briefkasten Manufaktur Lippe GmbH
Werler Straße 60
32105 Bad Salzuflen

www.briefkasten-manufaktur.de
info@briefkasten-manufaktur.de
Tel.: +49 5222 807110

Geschäftsführer Oliver Woineck
Ust.ID.Nr. DE303690847
Handelsregister Amtsgericht Lemgo, HRB 8618

More images









Briefkasten Manufaktur Lippe GmbH
Werler Straße 60
32105 Bad Salzuflen

www.briefkasten-manufaktur.de
info@briefkasten-manufaktur.de
Tel.: +49 5222 807110

Geschäftsführer Oliver Woineck
Ust.ID.Nr. DE303690847
Handelsregister Amtsgericht Lemgo, HRB 8618

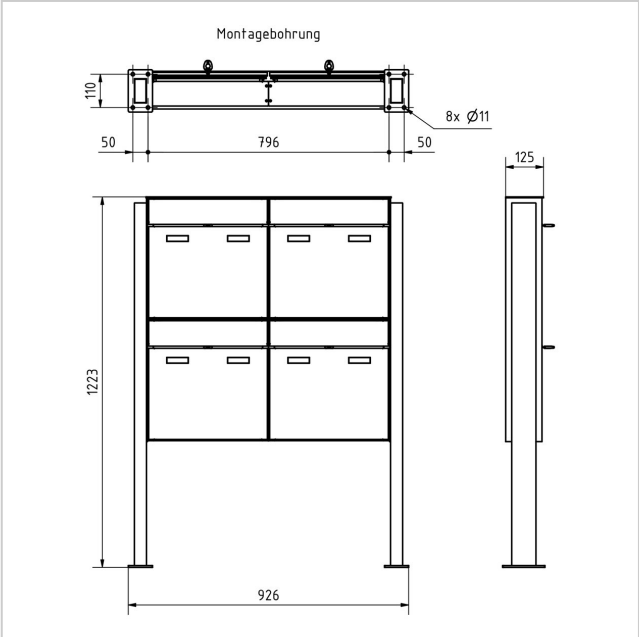

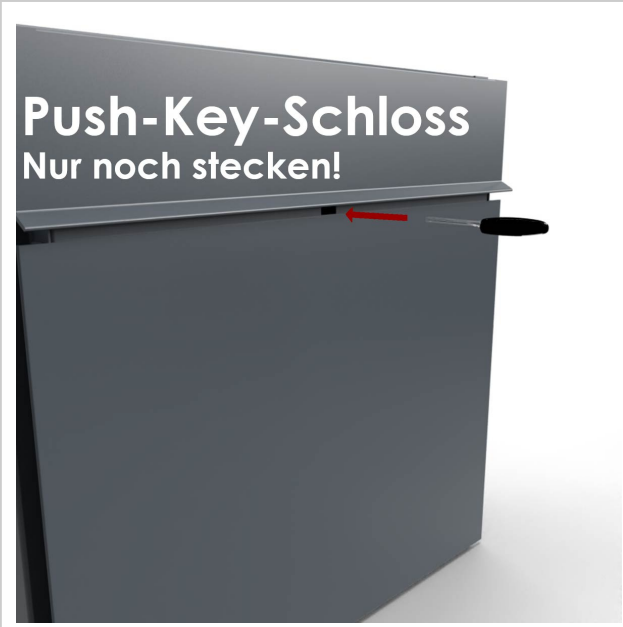

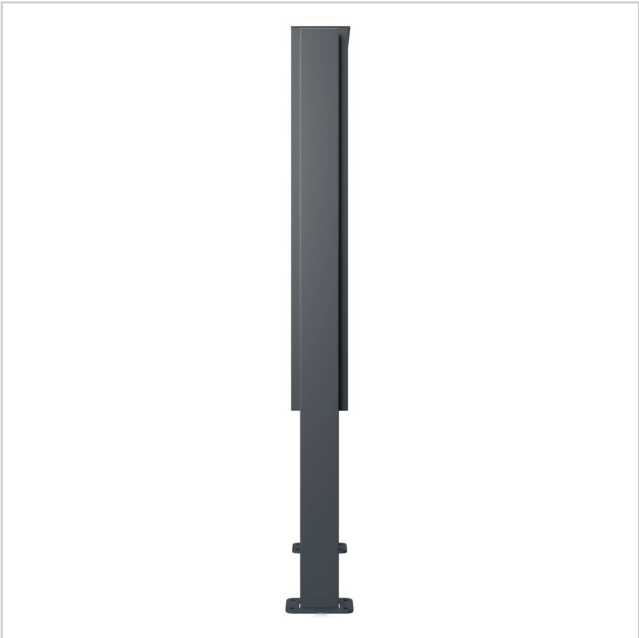



Briefkasten Manufaktur Lippe GmbH
Werler Straße 60
32105 Bad Salzuflen

www.briefkasten-manufaktur.de
info@briefkasten-manufaktur.de
Tel.: +49 5222 807110

Geschäftsführer Oliver Woineck
Ust.ID.Nr. DE303690847
Handelsregister Amtsgericht Lemgo, HRB 8618