2-piece surface-mounted letterbox design BASIC Plus 385XA AP with bell box - RAL of your choice | ? Colour of your choice | Top | with 2 mailboxes



Product number 385XA-2-SP

Product description

2-piece surface-mounted letterbox design BASIC Plus 385XA AP with bell box - RAL of your choice

Modern surface-mounted letterbox system for 2 parties made in Germany by Briefkasten Manufaktur.

The letterboxes are made of weather-resistant stainless steel V2A, powder-coated in RAL colour. The very high-quality workmanship and the well thought-out concept make this letterbox system our top seller. This letterbox system is characterised by a close-fitting side cladding with rain canopy and the rain drainage channels for optimum water protection, a throw-in flap with rubber lip, the solid interchangeable nameplate and the robust lock.

The letterbox systems in the BASIC Plus collection are characterised by the consistent use of V2A stainless steel. The result is a very long service life and sustainability. The design has been developed by our own engineers with a view to high flexibility and modularity, simple spare parts assembly and uncomplicated self-assembly. Spare parts are directly available for all BASIC Plus systems.

Briefkasten Manufaktur Lippe GmbH
Werler Straße 60
32105 Bad Salzuflen

www.briefkasten-manufaktur.de
info@briefkasten-manufaktur.de
Tel.: +49 5222 807110

Geschäftsführer Oliver Woineck
Ust.ID.Nr. DE303690847
Handelsregister Amtsgericht Lemgo, HRB 8618

- **2-piece surface-mounted letterbox system made of stainless steel V2 A, powder-coated in RAL colour**
- The system is manufactured by Briefkasten Manufaktur. German quality production "Made in Germany".
- The letterboxes comply with DIN/EN 13724. Insertion size (3.5 cm x 26.5 cm) for C4 landscape, large letters also fit in here without creasing.
- Insertion flaps with sound-absorbing rubber lip for very quiet mail insertion.
- The doors can be opened from left to right.
- Incl. 2 keys with key number and changeable name plate under the flap.
- With close-fitting side panelling and rain cover in solid design.
- **Doorbell box made of stainless steel V2 A, powder-coated in RAL colour**
- Intercom hole with universal adapter. (Intercom system/ built-in loudspeaker not included in the scope of delivery).
- Universal adapter is suitable for all commercially available built-in loudspeakers (Siedle, Ritto, TCS, Busch-Jäger, Gira, Legrand Bticino, ELCOM, Auerswald, Comelit and many more).
- Round stainless steel bell push type 4, max. 250 V AC, 5 A.
- Anti-vandalism - The nameplate is indentation-proof and impact-resistant, the plastic is flame-retardant.
- For simple 1-2 person wall mounting with mounting rail incl. fixing material (screws + wall plugs).

Important information

Camera or intercom preparation

The intercom systems must be connected by an electrician. Please contact your trusted electrician for planning, fitting and installation.

Water protection

The mail is only protected against moisture and dirt when it is fully inserted and the flap is closed. Under certain extreme weather conditions, water can still enter (up to 1ccm according to DIN EN 13724). This is not a reason for complaint.

Product properties

Surface/colour	RAL 9005 deep black, RAL 3004 crimson red, DB 703 iron mica, RAL 7016 anthracite grey, RAL of your choice (according to colour table), RAL 9007 grey aluminium, RAL 9016 traffic white
Series	BASIC
Number of bell push buttons	2 buttons
Functions	Light button, Intercom
Functional box prepared for manufacturer	GIRA, Busch Jaeger, Siedle, STR Elektronik, ELCOM, TCS, Ritto, ALGO, Telegärtner, Auerswald, Legrand Bticino, Comelit
Boxes by volume	Normal > 10 litres
Name labelling	Nameplate
Material	Stainless steel V2A 1.4301
Number of boxes	with 2 letterboxes
Removal of mail	On the front
Mounting type	Surface-mounted

Briefkasten Manufaktur Lippe GmbH
Werler Straße 60
32105 Bad Salzuflen

www.briefkasten-manufaktur.de
info@briefkasten-manufaktur.de
Tel.: +49 5222 807110

Geschäftsführer Oliver Woineck
Ust.ID.Nr. DE303690847
Handelsregister Amtsgericht Lemgo, HRB 8618

Dimensions

Height of single box in mm	110,0
Width of single box in mm	300,0
Capacity in litres	12
Height of letterbox slot in mm	35,0
Width of letter slot in mm	265,0
Height of letterbox in mm	330,0
Width of letterbox system in mm	300,0
Depth in mm	435,0
Weight in kg	12
Delivery condition	Supplied fully assembled

Dimension drawing

Briefkasten Manufaktur Lippe GmbH
Werler Straße 60
32105 Bad Salzuflen

www.briefkasten-manufaktur.de
info@briefkasten-manufaktur.de
Tel.: +49 5222 807110

Geschäftsführer Oliver Woineck
Ust.ID.Nr. DE303690847
Handelsregister Amtsgericht Lemgo, HRB 8618

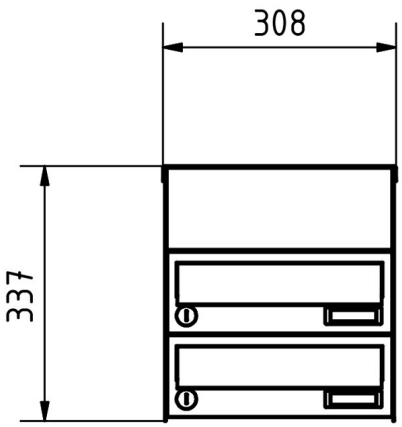

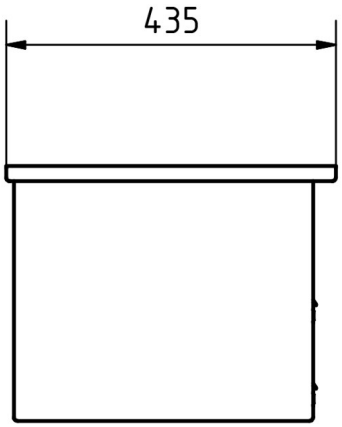

Briefkasten Manufaktur Lippe GmbH
Werler Straße 60
32105 Bad Salzuflen

www.briefkasten-manufaktur.de
info@briefkasten-manufaktur.de
Tel.: +49 5222 807110

Geschäftsführer Oliver Woineck
Ust.ID.Nr. DE303690847
Handelsregister Amtsgericht Lemgo, HRB 8618

More images









Briefkasten Manufaktur Lippe GmbH
Werler Straße 60
32105 Bad Salzuflen

www.briefkasten-manufaktur.de
info@briefkasten-manufaktur.de
Tel.: +49 5222 807110

Geschäftsführer Oliver Woineck
Ust.ID.Nr. DE303690847
Handelsregister Amtsgericht Lemgo, HRB 8618

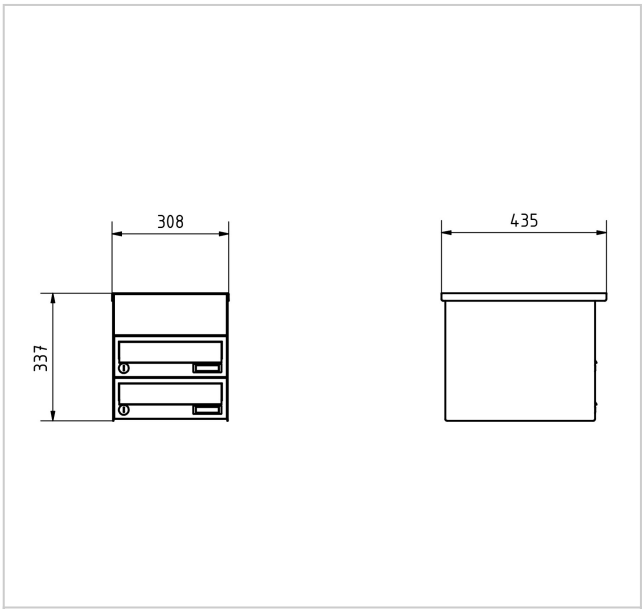





Briefkasten Manufaktur Lippe GmbH
Werler Straße 60
32105 Bad Salzuflen

www.briefkasten-manufaktur.de
info@briefkasten-manufaktur.de
Tel.: +49 5222 807110

Geschäftsführer Oliver Woineck
Ust.ID.Nr. DE303690847
Handelsregister Amtsgericht Lemgo, HRB 8618