# 18 6x3 stainless steel free-standing letterbox system Design BASIC Plus 385XP ST-T - RAL of your choice | 300x110x385 mm (WxHxD) - ?? Normal 12 litres | ? Colour of your choice | with 18 mailboxes



**Product number** 385XP-18

## Product description

## 18 6x3 stainless steel free-standing letter box system design BASIC Plus 385XP ST-T - RAL of your choice

Modern stainless steel free-standing letterbox for 18 parties made in Germany by Briefkasten Manufaktur.

The letterboxes are made of stainless steel V2A, powder-coated in RAL colour, the stand elements are made of anodised aluminium profile, powder-coated in RAL colour and are solidly manufactured and at the same time very elegant. A close-fitting side cladding with rain canopy and the rain drainage channels for optimum water protection, a throw-in flap with rubber lip, the solid changeable nameplate and the robust lock characterise this free-standing letterbox. This letterbox is easy to clean and robust.

The letterbox systems in the BASIC Plus collection are characterised by the consistent use of V2A stainless steel and aluminium. The result is a very long service life and sustainability. The design has been developed by our own engineers with a view to high flexibility and modularity, simple spare parts assembly and uncomplicated self-assembly. Spare parts are directly available for all BASIC Plus systems.

Briefkasten Manufaktur Lippe GmbH
Werler Straße 60
32105 Bad Salzuflen

www.briefkasten-manufaktur.de
info@briefkasten-manufaktur.de
Tel.: +49 5222 807110

Geschäftsführer Oliver Woineck
Ust.ID.Nr. DE303690847
Handelsregister Amtsgericht Lemgo, HRB 8618

- **18 letterboxes completely powder-coated in RAL colour**
- The system is manufactured by Briefkasten Manufaktur. German quality production "Made in Germany".
- The letterboxes made of stainless steel V2A, powder-coated in RAL colour, comply with DIN/EN 13724. Insertion size (3.5 cm x 26.5 cm) for C4 high, even large letters fit in here without creasing.
- Insertion flaps with sound-absorbing rubber lip for very quiet insertion of mail.
- The doors can be opened from left to right.
- Incl. 2 keys with key number and changeable name plate under the flap for each letterbox.
- Incl. close-fitting side cladding + rain cover made of V2A stainless steel, powder-coated in RAL colour.
- The stand elements are made of aluminium profile, powder-coated in RAL colour for screw mounting or setting in concrete.

**Important information:**

The post is only protected from moisture and dirt when it is fully inserted and the flap is closed. Under certain extreme weather conditions, water can still enter (up to 1ccm according to DIN EN 13724). This is not a reason for complaint.

## Product properties

| | |
|---|---|
| **Surface/colour** | RAL 9005 deep black, RAL 3004 crimson red, DB 703 iron mica, RAL 7016 anthracite grey, RAL of your choice (according to colour table), RAL 9007 grey aluminium, RAL 9016 traffic white |
| **Series** | BASIC |
| **Boxes by volume** | Normal > 10 litres |
| **Name labelling** | Nameplate |
| **Material** | Aluminium AlMg3 W19, Stainless steel V2A 1.4301 |
| **Mounting type** | Free-standing |
| **Removal of mail** | On the front |
| **Number of boxes** | with 18 letterboxes |

Briefkasten Manufaktur Lippe GmbH
Werler Straße 60
32105 Bad Salzuflen

www.briefkasten-manufaktur.de
info@briefkasten-manufaktur.de
Tel.: +49 5222 807110

Geschäftsführer Oliver Woineck
Ust.ID.Nr. DE303690847
Handelsregister Amtsgericht Lemgo, HRB 8618

# Dimensions

| | |
|---|---|
| **Height in mm** | 1 |
| **Height of single box in mm** | 110,0 |
| **Width of single box in mm** | 300,0 |
| **Capacity in litres** | 12 |
| **Height of letterbox slot in mm** | 35,0 |
| **Width of letter slot in mm** | 265,0 |
| **Height of letterbox in mm** | 660,0 |
| **Width of letterbox system in mm** | 900,0 |
| **Overall height in mm** | 1200,0 \| 1600,0 |
| **Total width in mm** | 1000,0 |
| **Depth in mm** | 435,0 |
| **Weight in kg** | 88 |
| **Delivery condition** | Supplied in blocks, stand elements / letterbox divided |

## Dimension drawing

Briefkasten Manufaktur Lippe GmbH
Werler Straße 60
32105 Bad Salzuflen

www.briefkasten-manufaktur.de
info@briefkasten-manufaktur.de
Tel.: +49 5222 807110

Geschäftsführer Oliver Woineck
Ust.ID.Nr. DE303690847
Handelsregister Amtsgericht Lemgo, HRB 8618

Montagebohrungen

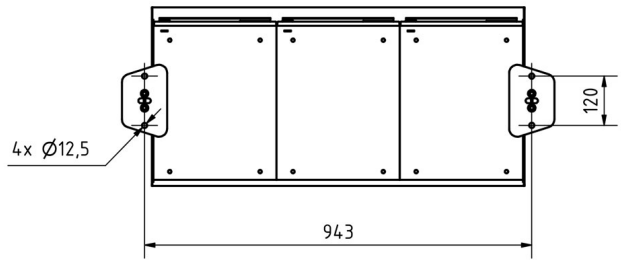


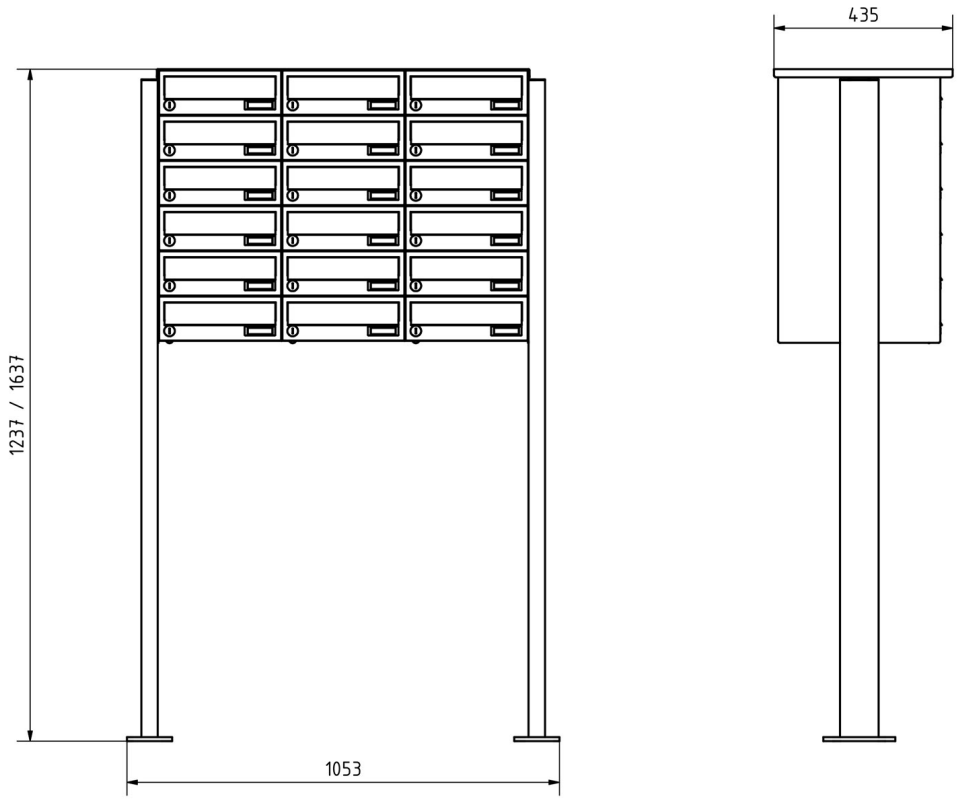


Briefkasten Manufaktur Lippe GmbH
Werler Straße 60
32105 Bad Salzuflen

www.briefkasten-manufaktur.de
info@briefkasten-manufaktur.de
Tel.: +49 5222 807110

Geschäftsführer Oliver Woineck
Ust.ID.Nr. DE303690847
Handelsregister Amtsgericht Lemgo, HRB 8618

# More images








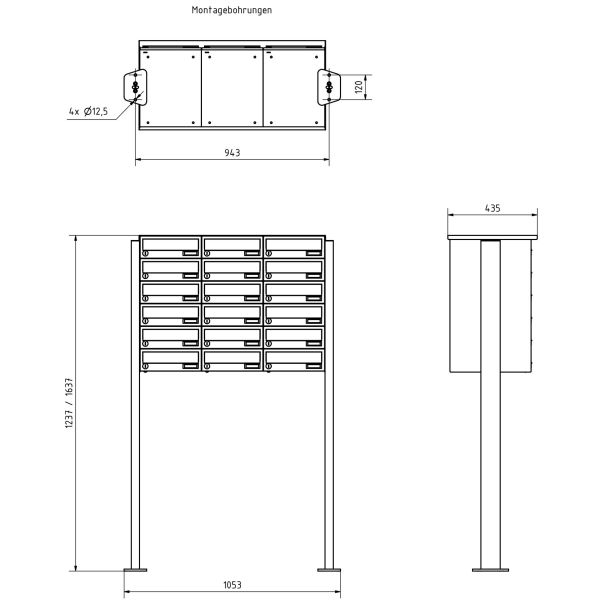


Briefkasten Manufaktur Lippe GmbH
Werler Straße 60
32105 Bad Salzuflen

www.briefkasten-manufaktur.de
info@briefkasten-manufaktur.de
Tel.: +49 5222 807110

Geschäftsführer Oliver Woineck
Ust.ID.Nr. DE303690847
Handelsregister Amtsgericht Lemgo, HRB 8618









Briefkasten Manufaktur Lippe GmbH
Werler Straße 60
32105 Bad Salzuflen

www.briefkasten-manufaktur.de
info@briefkasten-manufaktur.de
Tel.: +49 5222 807110

Geschäftsführer Oliver Woineck
Ust.ID.Nr. DE303690847
Handelsregister Amtsgericht Lemgo, HRB 8618