BASIC letterbox with parcel box – flush mounting – choice of RAL colour

Product number BML3D-WM2E5WUGE9



Product description

Letterbox unit with parcel reception – thoughtful design for your entrance

The BASIC Horizontal unit from Briefkasten Manufaktur welcomes you and your visitors with a clean, uncluttered design. Its modular construction brings your chosen functions together in a clearly arranged, customisable solution for everyday use. The BASIC series offers letterboxes, accessory boxes and functional boxes that can be combined in a variety of ways to create a coordinated entrance area. The unit is designed for flush mounting and provides a letterbox for daily post. An integrated parcel box accommodates parcel deliveries.

The unit is finished in your choice of RAL colour and has overall dimensions of W 791 × H 605 × D 403 mm.

Select “Configure now” to open this exact configuration in the 3D configurator. You can then customise the unit further and place your order.

Individually configurable

Design your letterbox unit to suit your home: select “Configure now” to adapt this configuration to your preferences.

- Box finish: customise the colour in the 3D configurator using the colours available for this version.
- Personalised labelling: customise the designated areas with your own names, house numbers or preferred text. Any labelling shown is for illustration and can be replaced.
- Typography: choose from the fonts available for labelling and adjust the appearance in the configurator.
- Equipment: add or change compatible components from the selection available for the unit.

When you make changes, the dimensions and price are recalculated in the 3D configurator to match your selection.

Plaster trim frame

The flush-mounted unit is fitted with a plaster trim frame made from 1,5 mm thick V2A stainless steel. The frame covers the join between the installation opening and the wall surface, creating a neat finish.

Briefkasten Manufaktur Lippe GmbH
Werler Straße 60
32105 Bad Salzuflen

www.briefkasten-manufaktur.de
info@briefkasten-manufaktur.de
Tel.: +49 5222 807110

Geschäftsführer Oliver Woineck
Ust.ID.Nr. DE303690847
Handelsregister Amtsgericht Lemgo, HRB 8618

Additional space for parcels, newspapers and more

As a parcel box, this compartment complements your letterbox by accepting parcels even when you are not at home. The selected BASIC series parcel lock with T-handle allows deliveries without giving the courier a key. You use your key to release the compartment for a single delivery. The courier opens the released compartment, places the parcel inside, closes the door and pushes the lock in to secure it. To retrieve your parcel, open the compartment with your key, then release it again for the next delivery. Until then, it is not available for further keyless deliveries. The external box dimensions are 370 × 550 × 385 mm (W × H × D). The clear door opening and usable internal dimensions determine which parcel sizes will fit; the external dimensions do not indicate the maximum parcel size. Please check the parcel size against the internal compartment dimensions in advance.

Materials and workmanship

Base material: V2A 1.4301 stainless steel. The V2A stainless steel provides a corrosion-resistant, durable foundation for your entrance area.

The powder-coated surface is finished in your choice of RAL colour. Select your preferred colour in the 3D configurator.

Letterbox and ease of use

Letterbox 370 × 550 × 385 mm: includes a rainwater run-off edge for optimum protection against water, a continuous rubber lip for quiet posting, a sturdy replaceable nameplate and a highly robust lock. The letter slot height and a narrowing in the chute help protect your post against unauthorised removal.

Equipment

BASIC plastic nameplate, type 2: nameplate made from crystal-clear polycarbonate. The insert can be replaced from the front.

Features of this letterbox unit

- Product range: BASIC Horizontal
- Mounting: flush mounting
- Finish: choice of RAL colour
- Overall dimensions: W 791 × H 605 × D 403 mm
- 1 letterbox, 1 accessory box
- Box finish: choice of RAL colour
- Base material: V2A 1.4301 stainless steel. Finish: powder coating or brushed stainless steel

Important information:

Protection against water: a sheltered location, preferably under a canopy, helps protect your post. Mail should be inserted fully and the letter flap should be closed.

Installation: check the mounting surface and installation conditions against the overall dimensions and installation instructions.

Briefkasten Manufaktur Lippe GmbH
Werler Straße 60
32105 Bad Salzuflen

www.briefkasten-manufaktur.de
info@briefkasten-manufaktur.de
Tel.: +49 5222 807110

Geschäftsführer Oliver Woineck
Ust.ID.Nr. DE303690847
Handelsregister Amtsgericht Lemgo, HRB 8618

Product properties

Series	BASIC
Functions	Parcel compartment
Number of boxes	with 1 parcel box, with 1 letterbox
Name labelling	Nameplate
Material	Stainless steel V2A 1.4301
Removal of mail	On the front
Surface/colour	RAL of your choice (according to colour table)
Mounting type	Flush-mounted

Briefkasten Manufaktur Lippe GmbH
Werler Straße 60
32105 Bad Salzuflen

www.briefkasten-manufaktur.de
info@briefkasten-manufaktur.de
Tel.: +49 5222 807110

Geschäftsführer Oliver Woineck
Ust.ID.Nr. DE303690847
Handelsregister Amtsgericht Lemgo, HRB 8618

Dimensions

Height of single box in mm	550
Width of single box in mm	370
Overall height in mm	605
Total width in mm	791
Depth in mm	403

Dimension drawing

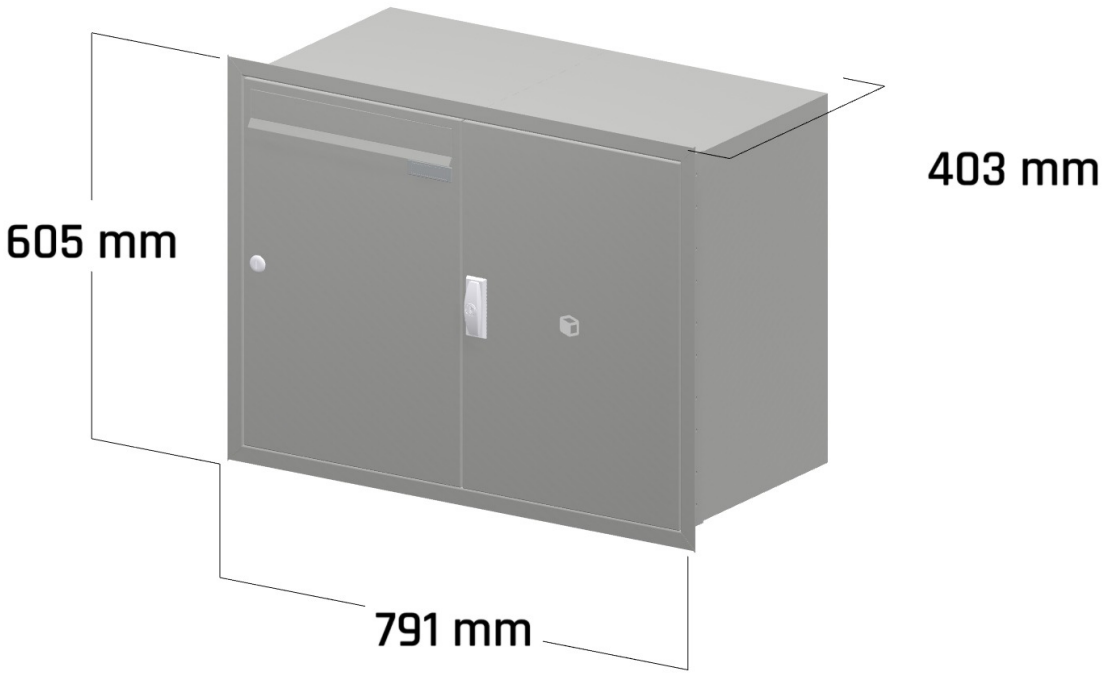

Briefkasten Manufaktur Lippe GmbH
Werler Straße 60
32105 Bad Salzuflen

www.briefkasten-manufaktur.de
info@briefkasten-manufaktur.de
Tel.: +49 5222 807110

Geschäftsführer Oliver Woineck
Ust.ID.Nr. DE303690847
Handelsregister Amtsgericht Lemgo, HRB 8618

More images



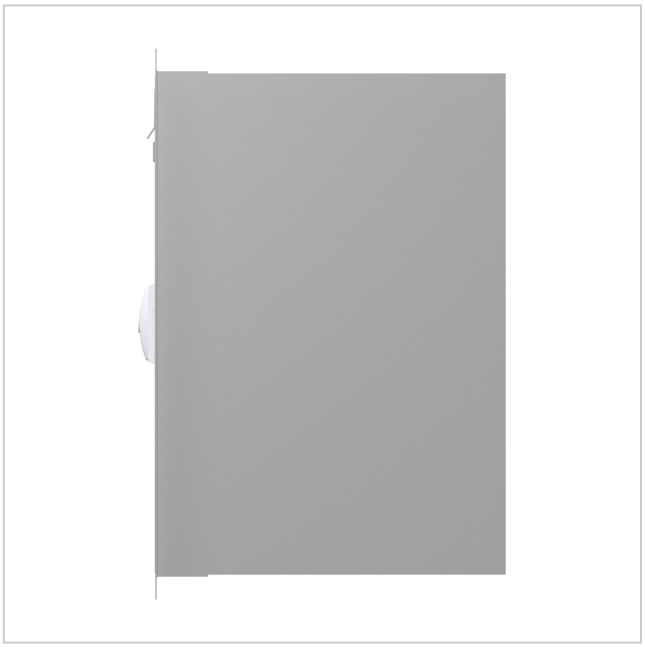

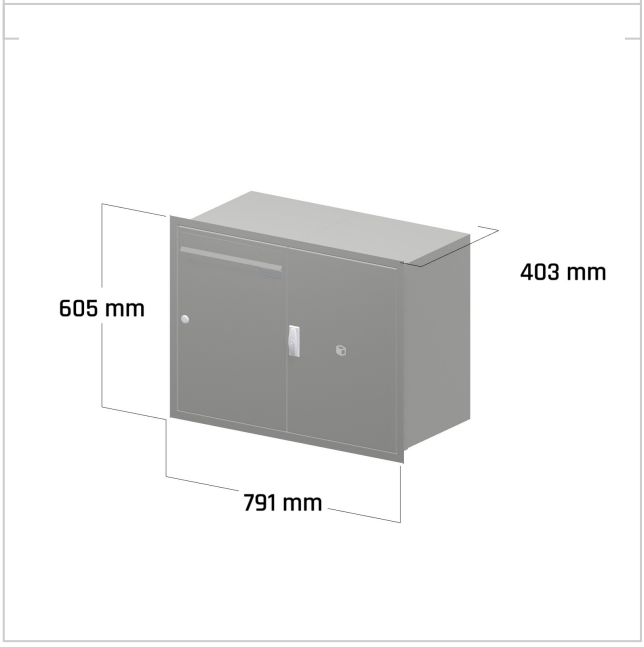

Briefkasten Manufaktur Lippe GmbH
Werler Straße 60
32105 Bad Salzuflen

www.briefkasten-manufaktur.de
info@briefkasten-manufaktur.de
Tel.: +49 5222 807110

Geschäftsführer Oliver Woineck
Ust.ID.Nr. DE303690847
Handelsregister Amtsgericht Lemgo, HRB 8618