KANT Edition mailbox with newspaper compartment - Design Elegance 6 - RAL 7016 anthracite grey | RAL 7016 Anthracite grey, fine texture, matt



Product number 303-E6-7016VA-AP

Product description

Mailbox KANT Edition with Newspaper Compartment - Design Elegance 6 - RAL 7016 anthracite grey

The Mailbox KANT Edition combines **elegant design** and functional convenience in a single product. Its minimalist design with a concealed lock and a stylish nameplate option blends seamlessly into modern residential environments. Rely on **durable quality** thanks to our excellent choice of materials and precise workmanship.

The generous capacity of approximately 12 litres and the top insertion ensure crease-free post – even for C4 envelopes and magazines. For additional convenience, the mailbox is equipped with **high-quality pivot dampers** that enable a smooth and quiet closing of the flap. The newspaper compartment of this mailbox offers maximum functionality with access from both sides, ideal for modern everyday use. A retrofittable closure lid is included in the scope of delivery, giving you the option to reliably seal the weather-exposed side.

Thanks to the design, self-installation is straightforward.

Briefkasten Manufaktur Lippe GmbH
Werler Straße 60
32105 Bad Salzuflen

www.briefkasten-manufaktur.de
info@briefkasten-manufaktur.de
Tel.: +49 5222 807110

Geschäftsführer Oliver Woineck
Ust.ID.Nr. DE303690847
Handelsregister Amtsgericht Lemgo, HRB 8618

- High-quality surface-mounted mailbox made of galvanised steel, powder-coated in RAL 7016 anthracite grey, fine-structure matt.
- Design Elegance 6: stainless steel front panel and narrow stainless steel strip, brushed to 240-grit finish.
- The door opens from top to bottom.
- Top insertion; insertion flap with high-quality pivot dampers for silent closing.
- Includes 2 keys with key number.
- The mailbox complies with DIN/EN 13724. Mail slot size (3.5 cm x 33.5 cm) for C4 landscape; large letters also fit without creasing.
- Newspaper compartment (W x H 360 x 110 mm) made of galvanised steel, powder-coated in RAL 7016 anthracite grey, fine-structure matt. Accessible from both sides (1x closure lid included).
- Optional name inscription approx. 8–25 mm high.
- Optional house number inscription approx. 60–80 mm high.
- For surface-mounted wall installation; mounting screws included.

Important information:

To achieve optimal protection of your post from water, the mailbox or mailbox system should, where possible, be installed under a canopy.

Postal items are protected from water only when they are placed completely inside the box and the insertion flap is closed. Partially inserted mail permits the ingress of moisture and dirt into the mailbox. This unit is protected against water ingress in accordance with DIN EN 13724. Water ingress does not constitute grounds for complaint.

Product properties

Material	Steel, galvanised, Stainless steel V2A 1.4301
Series	KANT
Functions	Newspaper compartment
Boxes by volume	Normal > 10 litres
House number	House number as laser engraving
Surface/colour	RAL 7016 anthracite grey, Brushed
Name labelling	Laser-engraved
Removal of mail	On the front
Number of boxes	with 1 letterbox
Mounting type	Surface-mounted

Briefkasten Manufaktur Lippe GmbH
Werler Straße 60
32105 Bad Salzuflen

www.briefkasten-manufaktur.de
info@briefkasten-manufaktur.de
Tel.: +49 5222 807110

Geschäftsführer Oliver Woineck
Ust.ID.Nr. DE303690847
Handelsregister Amtsgericht Lemgo, HRB 8618

Dimensions

Height of single box in mm	BK 280.0 | ZF 110.0
Width of single box in mm	355.0
Capacity in litres	12
Height of letterbox slot in mm	35.0
Width of letter slot in mm	335.0
Height of letterbox in mm	412.0
Width of letterbox system in mm	372.0
Total width in mm	372.0
Depth in mm	110.0 + 21.0 front panel
Weight in kg	6
Delivery condition	Delivered fully assembled.

Dimension drawing

Briefkasten Manufaktur Lippe GmbH
Werler Straße 60
32105 Bad Salzuflen

www.briefkasten-manufaktur.de
info@briefkasten-manufaktur.de
Tel.: +49 5222 807110

Geschäftsführer Oliver Woineck
Ust.ID.Nr. DE303690847
Handelsregister Amtsgericht Lemgo, HRB 8618

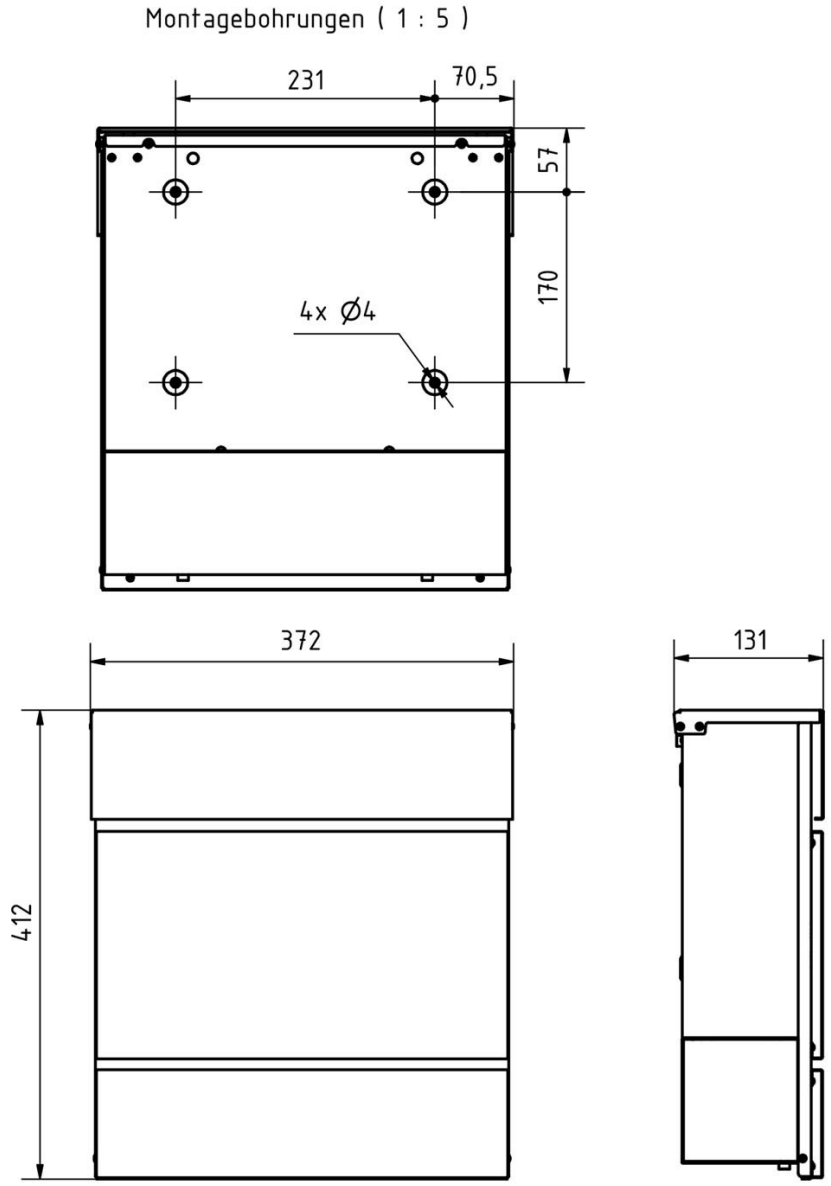

Briefkasten Manufaktur Lippe GmbH
Werler Straße 60
32105 Bad Salzuflen

www.briefkasten-manufaktur.de
info@briefkasten-manufaktur.de
Tel.: +49 5222 807110

Geschäftsführer Oliver Woineck
Ust.ID.Nr. DE303690847
Handelsregister Amtsgericht Lemgo, HRB 8618

More images









Briefkasten Manufaktur Lippe GmbH
Werler Straße 60
32105 Bad Salzuflen

www.briefkasten-manufaktur.de
info@briefkasten-manufaktur.de
Tel.: +49 5222 807110

Geschäftsführer Oliver Woineck
Ust.ID.Nr. DE303690847
Handelsregister Amtsgericht Lemgo, HRB 8618

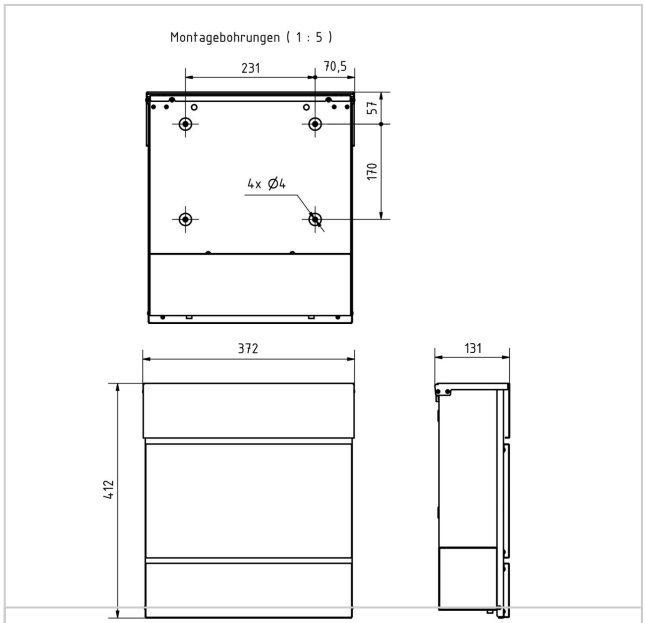





Briefkasten Manufaktur Lippe GmbH
Werler Straße 60
32105 Bad Salzuflen

www.briefkasten-manufaktur.de
info@briefkasten-manufaktur.de
Tel.: +49 5222 807110

Geschäftsführer Oliver Woineck
Ust.ID.Nr. DE303690847
Handelsregister Amtsgericht Lemgo, HRB 8618