15-unit freestanding mailbox system Design BASIC 385-VA ST-R - brushed stainless steel V2A | 300x110x385 mm (WxHxD) - ?? Normal 12 litres | with 15 mailboxes | Stainless steel, brushed



Product number 385-VA-15W

Product description

Freestanding 15-unit mailbox system BASIC 385 for 15 households – wide, multi-column version – brushed stainless steel V2A

For larger multi-family houses, residential complexes and demanding commercial properties, the freestanding BASIC 385 as a system for 15 households provides a durable and clear entrance solution. The independent stand mounting allows the mailbox system to be positioned to suit the site and access situation.

The W configuration distributes the mailboxes across a wider, multi-column layout, creating a clear frontage for multiple users.

The mailboxes are made from weather-resistant stainless steel V2A 1.4301 and are finely brushed. A close-fitting side cladding with rain hood unites the individual mailboxes into a single complete system.

Each compartment features an insertion slot of 35 × 265 mm for DIN C4 items in portrait format. A sound-dampening rubber lip reduces impact noise, while the front access doors open from left to right. Each mailbox is supplied with two keys with key number and a replaceable nameplate located beneath the letter flap.

The advantages of the BASIC 385 at a glance

Solid stainless steel support posts

Round-tube support posts with approx. 60 mm diameter in brushed stainless steel V2A 1.4301 form a stable base for the freestanding mailbox system. The robust construction is designed for permanent use at the property entrance.

Large letter slot to DIN EN 13724

Briefkasten Manufaktur Lippe GmbH
Werler Straße 60
32105 Bad Salzuflen

www.briefkasten-manufaktur.de
info@briefkasten-manufaktur.de
Tel.: +49 5222 807110

Geschäftsführer Oliver Woineck
Ust.ID.Nr. DE303690847
Handelsregister Amtsgericht Lemgo, HRB 8618

The insertion opening of 35 × 265 mm is designed for DIN C4 items in portrait format. Larger envelopes can also be inserted without bending.

Quiet insertion and comfortable retrieval

A sound-dampening rubber lip reduces the impact of the letter flaps. Mail is retrieved from the front via doors that open from left to right.

Completely in brushed stainless steel

The stainless steel version combines mailboxes, cladding and support posts into a high-quality, low-maintenance complete system.

Proven BASIC quality Made in Germany

The combination of solid material selection, mail compartments conforming to DIN EN 13724 and an assembly-friendly construction makes the BASIC 385 a long-lasting solution for daily use.

Equipment of the BASIC 385 mailbox system

Mailbox system

Design Wide, multi-column version
Number of mailboxes 15 separately usable compartments
Mailbox material Stainless steel V2A 1.4301
Surface Stainless steel V2A 1.4301, brushed
Rain hood / side cladding Stainless steel V2A 1.4301, brushed
Manufacture Made in Germany by Briefkasten Manufaktur Lippe

Mail and operation

Insertion opening 35 × 265 mm, suitable for DIN C4 portrait
Letter flaps With sound-dampening rubber lip
Mail retrieval Front access
Door opening From left to right
Keys 2 keys with key number per mailbox
Nameplate Replaceable nameplate beneath the letter flap
Standard Mailboxes conforming to DIN EN 13724

Support posts and fittings

Support posts Round tube approx. 60 mm in stainless steel V2A 1.4301, brushed
Mounting options Optional for screw mounting or for embedding in concrete
Fixings Anchor bolts for screw mounting not included; select suitable fixings for the foundation separately

Mailbox size and volume

The BASIC 385 is available with different mailbox sizes depending on the product configuration. The standard version 300 × 110 × 385 mm provides approx. 12 litres volume; depending on the variant, 300 × 220 × 385 mm with approx. 25 litres volume is also available.

Briefkasten Manufaktur Lippe GmbH
Werler Straße 60
32105 Bad Salzuflen

www.briefkasten-manufaktur.de
info@briefkasten-manufaktur.de
Tel.: +49 5222 807110

Geschäftsführer Oliver Woineck
Ust.ID.Nr. DE303690847
Handelsregister Amtsgericht Lemgo, HRB 8618

Installation by embedding in concrete

For the freestanding system we recommend a suitably dimensioned concrete foundation. When embedding, the stainless steel support posts must be aligned plumb and permanently anchored in the foundation. Foundation size and embedment depth must be matched to ground conditions, system weight and local requirements.

Screw mounting on a foundation

For screw mounting a flat and load-bearing concrete foundation is required. Suitable anchor bolts or fixing materials must be selected to suit the substrate and the system load. For the BASIC-385-ST-R versions, anchor bolts are not included in the standard scope of delivery.

Note on weather protection

Mail items are best protected from moisture and dirt when fully inserted and with the letter flap closed. Protruding items can prevent the flap from fully closing. In extreme weather conditions, moisture may enter the mailbox despite norm-compliant design.

Product properties

Series	BASIC
Boxes by volume	Normal > 10 litres
Name labelling	Nameplate
Mounting type	Free-standing
Material	Stainless steel V2A 1.4301
Number of boxes	with 15 letterboxes
Removal of mail	On the front
Surface/colour	Brushed

Briefkasten Manufaktur Lippe GmbH
Werler Straße 60
32105 Bad Salzuflen

www.briefkasten-manufaktur.de
info@briefkasten-manufaktur.de
Tel.: +49 5222 807110

Geschäftsführer Oliver Woineck
Ust.ID.Nr. DE303690847
Handelsregister Amtsgericht Lemgo, HRB 8618

Dimensions

Height of single box in mm	110.0
Width of single box in mm	300.0
Capacity in litres	12
Height of letterbox slot in mm	35.0
Width of letter slot in mm	265.0
Height of letterbox in mm	550.0
Width of letterbox system in mm	900.0
Overall height in mm	1200.0 | 1500.0 | 1700.0
Total width in mm	1060.0
Depth in mm	435.0
Weight in kg	76
Delivery condition	Delivery is made in blocks; freestanding elements / mailbox are delivered separately.

Dimension drawing

Briefkasten Manufaktur Lippe GmbH
Werler Straße 60
32105 Bad Salzuflen

www.briefkasten-manufaktur.de
info@briefkasten-manufaktur.de
Tel.: +49 5222 807110

Geschäftsführer Oliver Woineck
Ust.ID.Nr. DE303690847
Handelsregister Amtsgericht Lemgo, HRB 8618

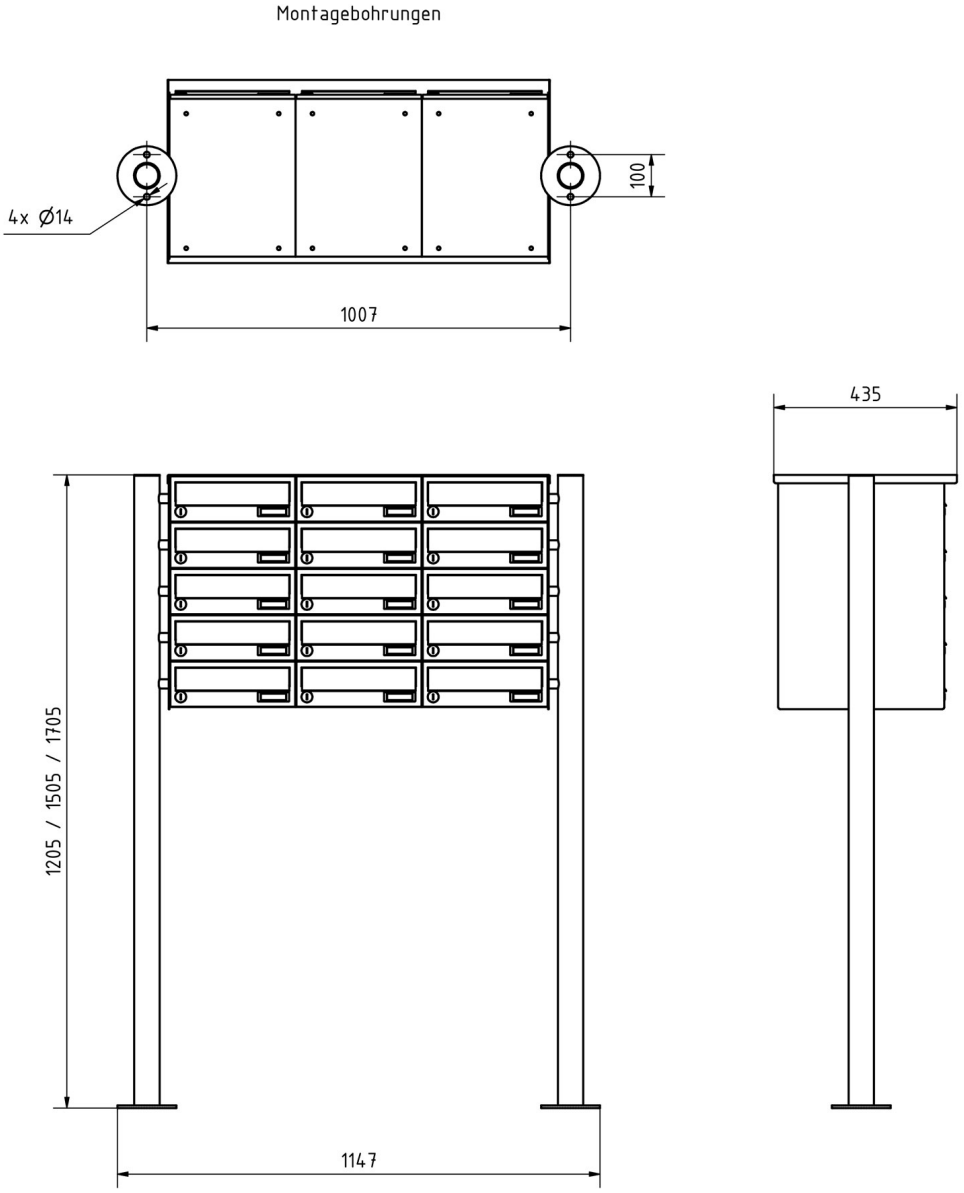

Briefkasten Manufaktur Lippe GmbH
Werler Straße 60
32105 Bad Salzuflen

www.briefkasten-manufaktur.de
info@briefkasten-manufaktur.de
Tel.: +49 5222 807110

Geschäftsführer Oliver Woineck
Ust.ID.Nr. DE303690847
Handelsregister Amtsgericht Lemgo, HRB 8618

More images





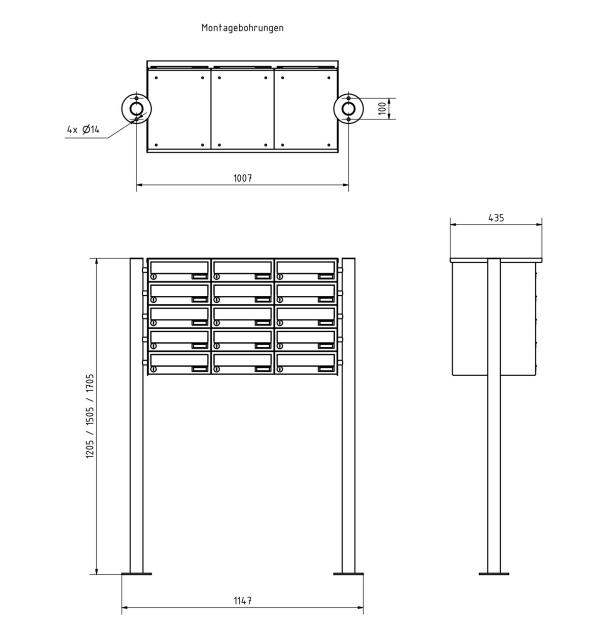



Briefkasten Manufaktur Lippe GmbH
Werler Straße 60
32105 Bad Salzuflen

www.briefkasten-manufaktur.de
info@briefkasten-manufaktur.de
Tel.: +49 5222 807110

Geschäftsführer Oliver Woineck
Ust.ID.Nr. DE303690847
Handelsregister Amtsgericht Lemgo, HRB 8618