9-compartment BASIC letterbox system – flush-mounted – choice of RAL colour

Product number BML3D-4CXAMA9T4T

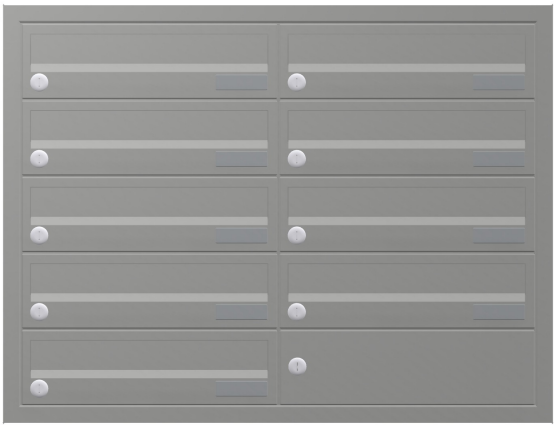

Product description

Welcoming design and convenient everyday mail delivery

The BASIC Horizontal system from Briefkasten Manufaktur welcomes you and your visitors with a clean, uncluttered design. Its modular construction brings your chosen functions together in a well-organised solution that can be tailored to your everyday needs. The BASIC series offers versatile combinations of letterboxes, accessory boxes and functional modules for a coordinated entrance area. The system is designed for flush mounting and provides 9 letterboxes for daily mail.

The system is finished in your choice of RAL colour and has overall dimensions of W 791 × H 605 × D 394 mm.

Select “Configure now” to open this exact configuration in the 3D configurator. You can then customise the system further and place your order.

Individually configurable

Tailor your letterbox system to your home: select “Configure now” to adapt this configuration to your requirements.

- Box finish: customise the colour in the 3D configurator using the colours available for this version.
- Personalised labelling: add your own names, house numbers or preferred text to the designated areas. Any labelling shown is for illustration and can be replaced.
- Lettering style: choose from the fonts available for labelling and adjust the appearance in the configurator.
- Features: add or change compatible components from the options currently available for the system.

When you make individual changes, the dimensions and price are recalculated in the 3D configurator to reflect your selections.

Flush-mount trim frame

Briefkasten Manufaktur Lippe GmbH
Werler Straße 60
32105 Bad Salzuflen

www.briefkasten-manufaktur.de
info@briefkasten-manufaktur.de
Tel.: +49 5222 807110

Geschäftsführer Oliver Woineck
Ust.ID.Nr. DE303690847
Handelsregister Amtsgericht Lemgo, HRB 8618

The flush-mounted system is fitted with a trim frame made from 1,5 mm thick V2A stainless steel. The frame covers the junction between the installation opening and the wall surface for a neat finish.

Extra space for parcels, newspapers and more

This accessory box provides additional space for storage and handover. Access is via a cam lock with a stainless steel cap, supplied with 2 keys. The very robust cam lock includes 2 keys. This lock is fitted with a stainless steel protective flap that prevents liquids and dirt particles from entering the lock. Additional or replacement keys can be found here. The external box dimensions are 370 × 110 × 385 mm (W × H × D).

Materials and workmanship

Base material: V2A 1.4301 stainless steel. V2A stainless steel provides a corrosion-resistant, durable foundation for the entrance area.

The powder-coated surface is finished in your choice of RAL colour. Select your preferred colour in the 3D configurator.

Letterbox and ease of use

Letterbox 370 × 110 × 385 mm: includes a rainwater drainage edge for optimum water protection, a continuous rubber lip for quiet mail delivery, a sturdy nameplate with a replaceable insert and a very robust lock. The height of the letter slot and the narrowing of the chute nevertheless protect the mail against unauthorised removal.

Features

BASIC plastic nameplate, type 2: nameplate made from crystal-clear polycarbonate. The insert can be replaced from the front.

Features of this letterbox system

- Product range: BASIC Horizontal
- Mounting: flush mounting
- Finish: choice of RAL colour
- Overall dimensions: W 791 × H 605 × D 394 mm
- 9 letterboxes, 1 accessory box
- Box finish: choice of RAL colour
- Base material: V2A 1.4301 stainless steel. Finish: powder coating or brushed stainless steel

Important information:

Water protection: a sheltered location, ideally under a canopy, helps protect your mail. Mail should be inserted fully and the letter flap kept closed.

Installation: check the mounting surface and installation conditions against the overall dimensions and installation instructions.

Product properties

Series	BASIC
Number of boxes	with 9 letterboxes
Name labelling	Nameplate
Material	Stainless steel V2A 1.4301
Removal of mail	On the front
Surface/colour	RAL of your choice (according to colour table)
Mounting type	Flush-mounted

Briefkasten Manufaktur Lippe GmbH
Werler Straße 60
32105 Bad Salzuflen

www.briefkasten-manufaktur.de
info@briefkasten-manufaktur.de
Tel.: +49 5222 807110

Geschäftsführer Oliver Woineck
Ust.ID.Nr. DE303690847
Handelsregister Amtsgericht Lemgo, HRB 8618

Dimensions

Height of single box in mm	110
Width of single box in mm	370
Overall height in mm	605
Total width in mm	791
Depth in mm	394

Dimension drawing

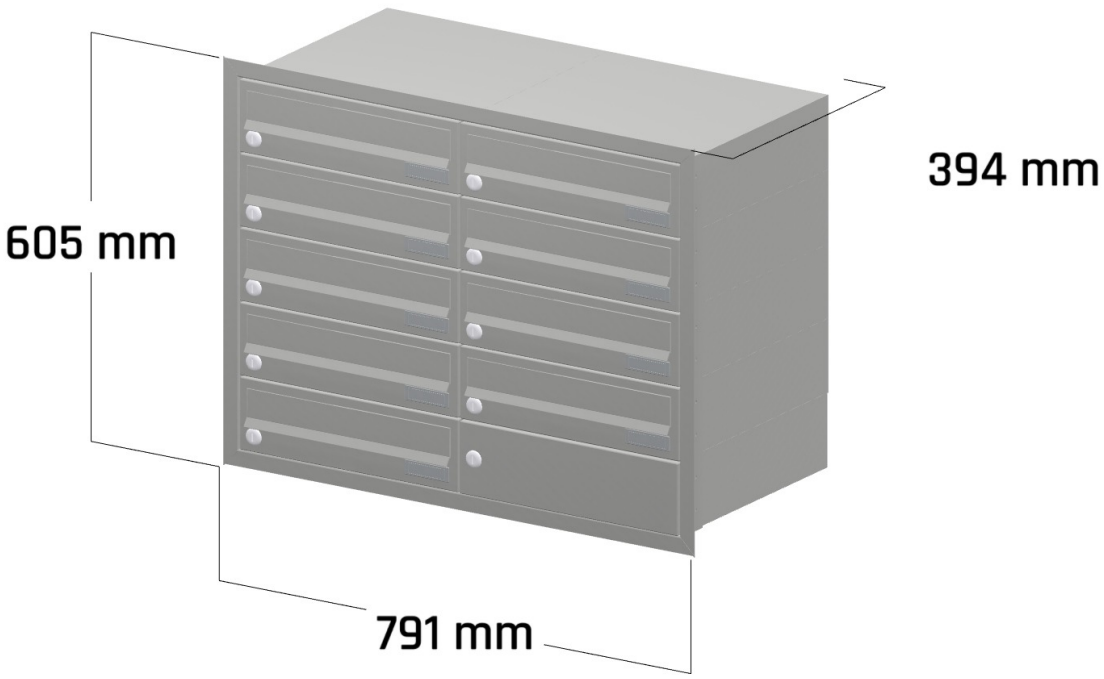

Briefkasten Manufaktur Lippe GmbH
Werler Straße 60
32105 Bad Salzuflen

www.briefkasten-manufaktur.de
info@briefkasten-manufaktur.de
Tel.: +49 5222 807110

Geschäftsführer Oliver Woineck
Ust.ID.Nr. DE303690847
Handelsregister Amtsgericht Lemgo, HRB 8618

More images

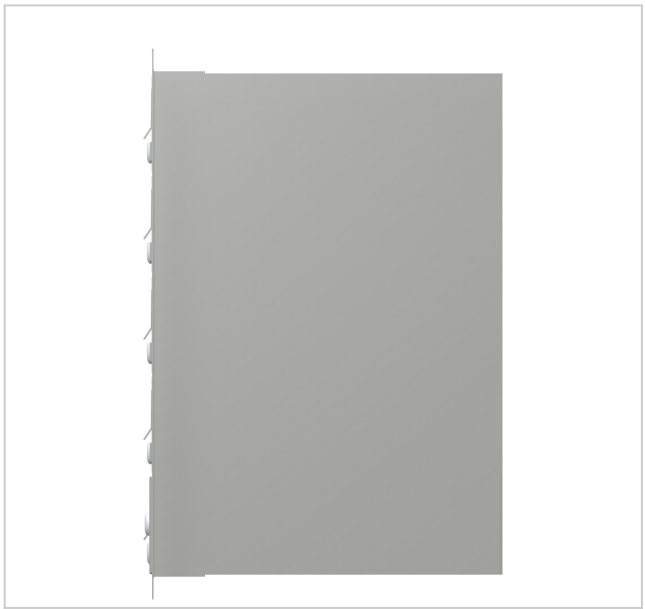



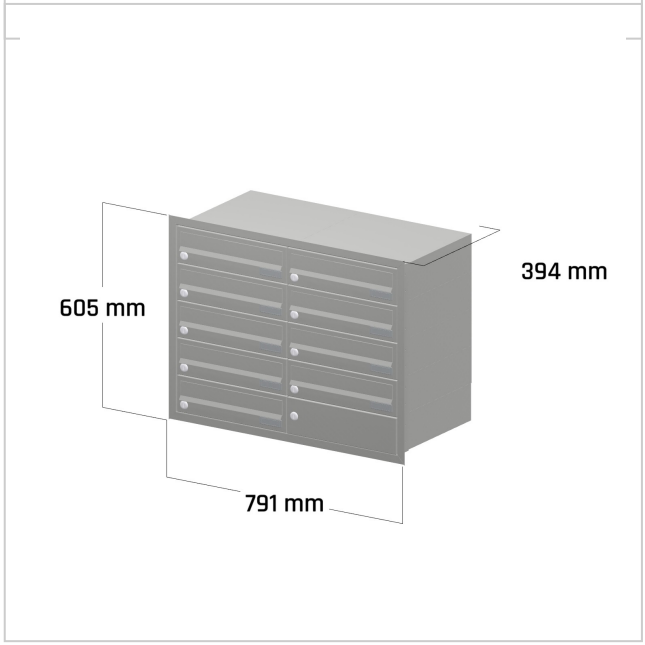

Briefkasten Manufaktur Lippe GmbH
Werler Straße 60
32105 Bad Salzuflen

www.briefkasten-manufaktur.de
info@briefkasten-manufaktur.de
Tel.: +49 5222 807110

Geschäftsführer Oliver Woineck
Ust.ID.Nr. DE303690847
Handelsregister Amtsgericht Lemgo, HRB 8618