6-unit (3x2) designer freestanding mailbox GOETHE ST-R - RAL colour of your choice | 100mm depth | with 6 mailboxes (3x2)



Product number 215-STR-6W

Product description

6-unit 3x2 design freestanding mailbox GOETHE ST-R - RAL colour of your choice

High-quality manufactured 6-party freestanding mailbox with elegant round-tube stand elements. The modern GOETHE mailbox is ideal for a sophisticated entrance area. Its clean-lined design without a visible lock gives this mailbox an especially elegant appearance.

The dimensions of the individual compartments provide a capacity of approx. 16 litres; the large insertion slot also ensures that DIN C4 envelopes and magazines, or post accumulated during several days' absence, do not arrive creased. The innovative Push-Key lock is hidden invisibly inside the mailbox. The key is simply inserted into the provided opening (no turning required) and the door opens. The arrangement of the lock is designed so that the retrieval door prevents your post from falling out towards you. Thanks to the water drainage edge, the mail stored inside is optimally protected from the weather. The insertion flap is fitted with high-quality hinge dampers to ensure very quiet closing and to prevent annoying rattling caused by weather conditions. The replaceable nameplates made of plexiglass can be comfortably operated from the front; for an optimal appearance we recommend the flush-mounted nameplate with laser engraving (see Accessories). The second nameplate is fitted with an 'Advertising Yes/No' insert.

The mailbox systems of the GOETHE collection are characterised by the consistent use of stainless steel and aluminium. The result is very high durability and sustainability. The construction has been developed by our in-house engineers with a focus on high flexibility and modularity, simple spare-part assembly and uncomplicated self-assembly. Spare parts for all GOETHE systems are available directly from our shop.

Thanks to the design, self-assembly is straightforward.

Protected utility model according to DPMA file number DE: 20 2021 101 679.5

Briefkasten Manufaktur Lippe GmbH
Werler Straße 60
32105 Bad Salzuflen

www.briefkasten-manufaktur.de
info@briefkasten-manufaktur.de
Tel.: +49 5222 807110

Geschäftsführer Oliver Woineck
Ust.ID.Nr. DE303690847
Handelsregister Amtsgericht Lemgo, HRB 8618

- 6-unit freestanding mailbox made of stainless steel and aluminium.
- Mailboxes made of stainless steel 1.4016 (corrosion-resistant magnetic stainless steel), powder-coated in RAL colour of your choice.
- Quality manufacture - Made in Germany by Briefkasten Manufaktur Lippe.
- Innovative Push-Key lock with 2 keys per party.
- Letter insertion and retrieval are from the front. Insertion flap with high-quality hinge dampers for very quiet mail insertion.
- The mailboxes comply with DIN/EN 13724. Insertion size (3.5 cm x 36.0 cm) for C4 in landscape orientation; large letters fit without being bent.
- Retrieval doors open from top to bottom so that the post cannot fall out towards you.
- Plexiglass nameplate for name inscription and a second nameplate with an 'Advertising Yes/No' insert per party.
- Optional house number labelling approx. 70–80 mm high.
- Optimal protection from rain through drip edges and a rain canopy made from 3 mm aluminium AlMg3 W19, powder-coated in RAL colour of your choice.
- Side cladding made from 3 mm aluminium AlMg3 W19, powder-coated in RAL colour of your choice.
- Rear panel made of 1 mm stainless steel V2A 1.4301, powder-coated in RAL colour of your choice.
- The support posts consist of 60.3 mm stainless steel V2A 1.4301, brushed, for screw mounting or for concreting in.

Important information:

Where possible, the mailbox or mailbox system should be positioned under a canopy to achieve optimal protection of your post from water.

Mail is protected from water only when it is placed completely inside the box and the insertion flap is closed. Mail not fully inserted allows the ingress of moisture and dirt into the mailbox. This system is protected against water ingress according to DIN EN 13724. Water ingress is not a valid reason for a complaint.

Product properties

Surface/colour	RAL 9005 deep black, RAL 3004 crimson red, DB 703 iron mica, RAL 7016 anthracite grey, RAL of your choice (according to colour table), RAL 9007 grey aluminium, RAL 9016 traffic white
Series	GOETHE
Number of boxes	with 6 letterboxes
Name labelling	Nameplate
Material	Aluminium AlMg3 W19, Stainless steel V2A 1.4301, Stainless steel 1.4016 (non-rusting magnetic stainless steel)
Mounting type	Free-standing
Removal of mail	On the front
Boxes by volume	Large > 16 litres

Briefkasten Manufaktur Lippe GmbH
Werler Straße 60
32105 Bad Salzuflen

www.briefkasten-manufaktur.de
info@briefkasten-manufaktur.de
Tel.: +49 5222 807110

Geschäftsführer Oliver Woineck
Ust.ID.Nr. DE303690847
Handelsregister Amtsgericht Lemgo, HRB 8618

Dimensions

Height of single box in mm	400,0
Width of single box in mm	400,0
Capacity in litres	16
Height of letterbox slot in mm	35,0
Width of letter slot in mm	360,0
Height of letterbox in mm	800,0
Width of letterbox system in mm	1200,0
Overall height in mm	1200,0 | 1500,0 | 1700,0
Total width in mm	1370,0
Depth in mm	100.0 + 25.0 Rain roof
Weight in kg	66
Delivery condition	Supplied in blocks, stand elements / letterbox divided

Dimension drawing

Briefkasten Manufaktur Lippe GmbH
Werler Straße 60
32105 Bad Salzuflen

www.briefkasten-manufaktur.de
info@briefkasten-manufaktur.de
Tel.: +49 5222 807110

Geschäftsführer Oliver Woineck
Ust.ID.Nr. DE303690847
Handelsregister Amtsgericht Lemgo, HRB 8618

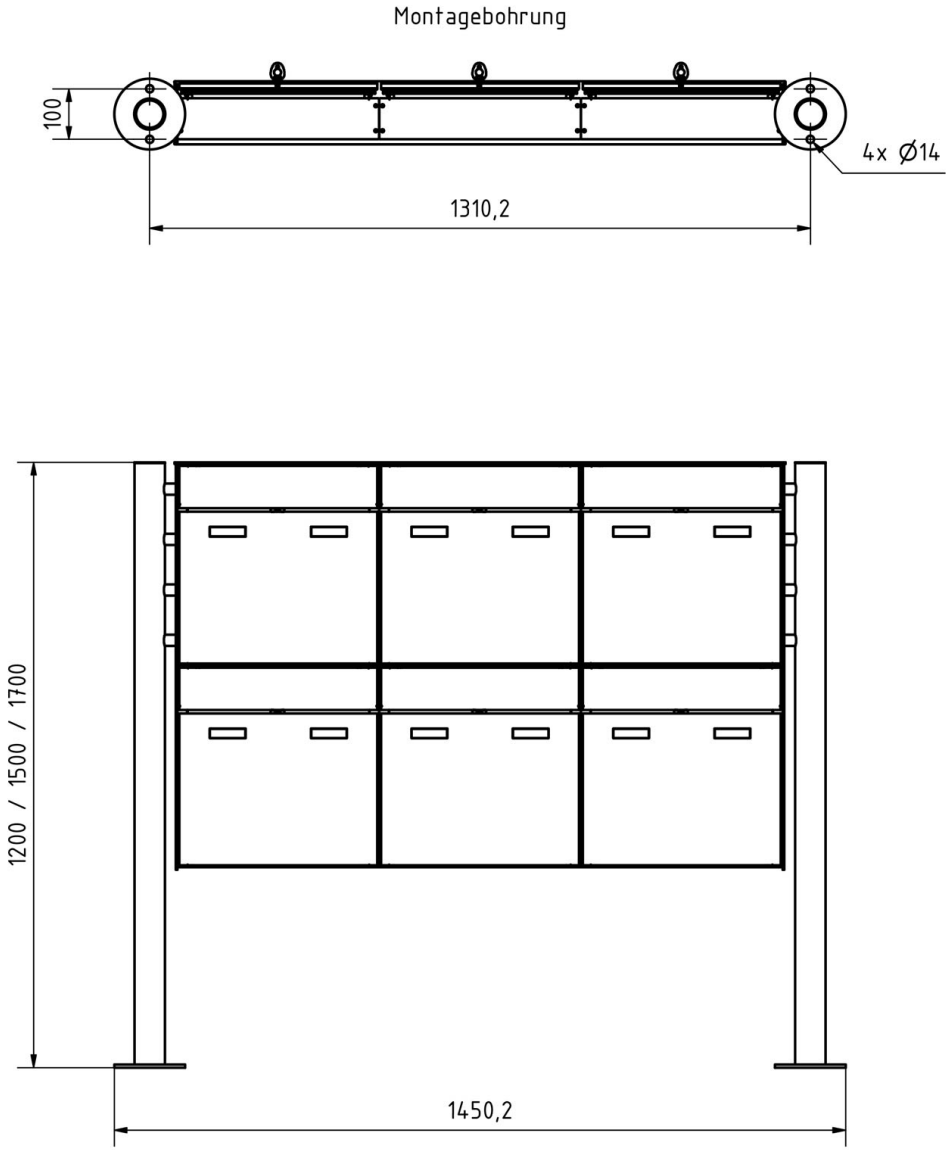

Briefkasten Manufaktur Lippe GmbH
Werler Straße 60
32105 Bad Salzuflen

www.briefkasten-manufaktur.de
info@briefkasten-manufaktur.de
Tel.: +49 5222 807110

Geschäftsführer Oliver Woineck
Ust.ID.Nr. DE303690847
Handelsregister Amtsgericht Lemgo, HRB 8618

More images



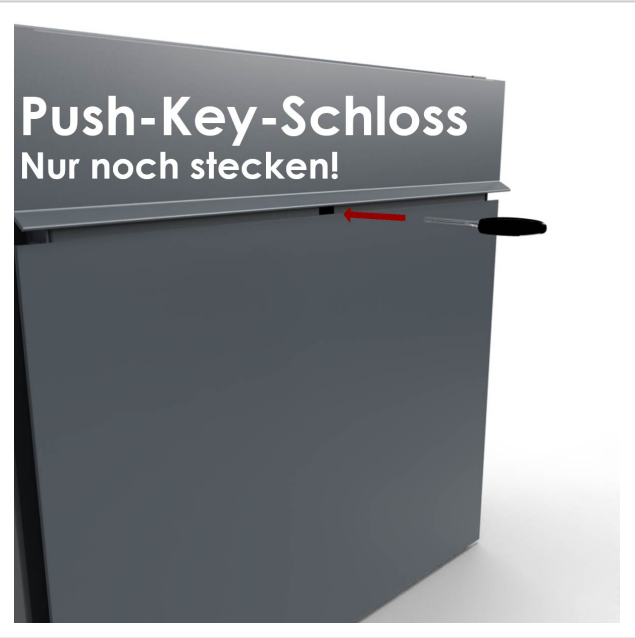





Briefkasten Manufaktur Lippe GmbH
Werler Straße 60
32105 Bad Salzuflen

www.briefkasten-manufaktur.de
info@briefkasten-manufaktur.de
Tel.: +49 5222 807110

Geschäftsführer Oliver Woineck
Ust.ID.Nr. DE303690847
Handelsregister Amtsgericht Lemgo, HRB 8618





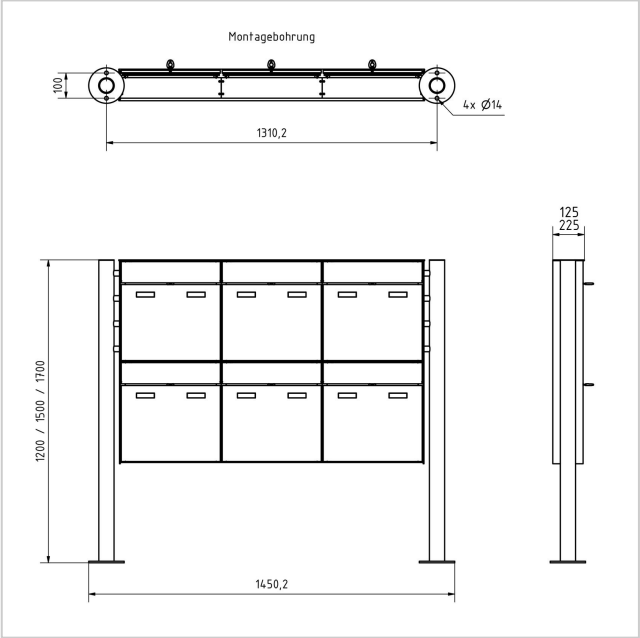



Briefkasten Manufaktur Lippe GmbH
Werler Straße 60
32105 Bad Salzuflen

www.briefkasten-manufaktur.de
info@briefkasten-manufaktur.de
Tel.: +49 5222 807110

Geschäftsführer Oliver Woineck
Ust.ID.Nr. DE303690847
Handelsregister Amtsgericht Lemgo, HRB 8618



Briefkasten Manufaktur Lippe GmbH
Werler Straße 60
32105 Bad Salzuflen

www.briefkasten-manufaktur.de
info@briefkasten-manufaktur.de
Tel.: +49 5222 807110

Geschäftsführer Oliver Woineck
Ust.ID.Nr. DE303690847
Handelsregister Amtsgericht Lemgo, HRB 8618