BASIC pillar with 4 mailboxes, parcel box and LED lighting – choice of RAL colour

Product number BML3D-MZZQCRZWEK

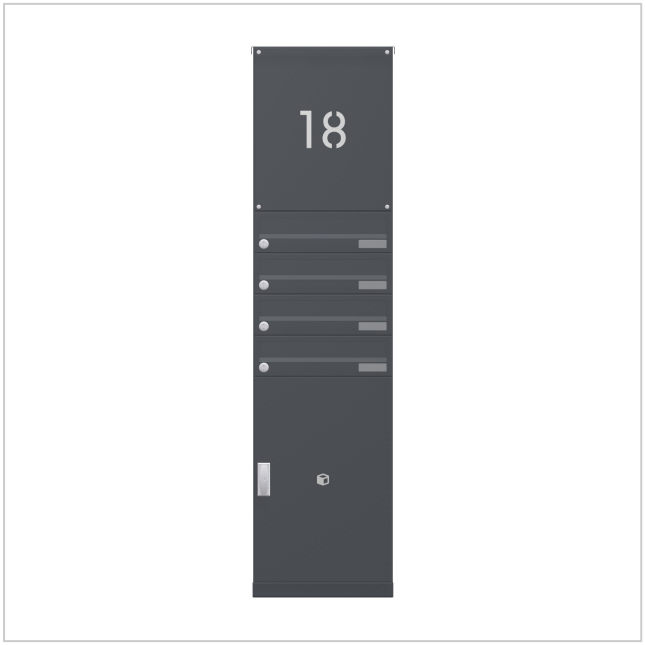

Product description

Mailbox system with parcel reception and LED lighting – thoughtful design for your entrance

The BASIC Horizontal system from Briefkasten Manufaktur welcomes you and your visitors with a clean, uncluttered design. Its modular construction brings the selected functions together in a clearly arranged, customisable solution for everyday use. The BASIC series offers mailboxes, accessory boxes and functional modules that can be combined in many ways to create a coordinated entrance area. The system is designed for pillar mounting and provides 4 mailboxes for daily post. An integrated parcel box accommodates parcel deliveries.

The system is finished in your choice of RAL colour and has overall dimensions of W 383 × H 1472 × D 430 mm.

Select “Configure now” to open this exact configuration in the 3D configurator. You can then customise the system further and place your order.

Individually configurable

Design your mailbox system to suit your home: select “Configure now” to adapt this configuration to your requirements.

- Support posts in a suitable length: choose from the post lengths available for your installation. You can change the length shown.
- Box finish: adjust the colour in the 3D configurator using the colours available for this version.
- Personalised lettering: customise the designated areas with your own names, house numbers or text. Any lettering shown is an example and can be replaced.
- Lettering style: choose from the fonts available for lettering and adjust the appearance in the configurator.
- Backlit lettering can be configured on the designated areas of this system.
- Features: add or change compatible components from the selection available for this system.

Briefkasten Manufaktur Lippe GmbH
Werler Straße 60
32105 Bad Salzuflen

www.briefkasten-manufaktur.de
info@briefkasten-manufaktur.de
Tel.: +49 5222 807110

Geschäftsführer Oliver Woineck
Ust.ID.Nr. DE303690847
Handelsregister Amtsgericht Lemgo, HRB 8618

When you make individual changes, the dimensions and price are recalculated in the 3D configurator to reflect your selection.

Robust cladding and thoughtful weather protection

The rain canopy made from V2A 1.4301 stainless steel complements the built-in weather protection: it shields the top and helps keep rain away from the front.

The side cladding made from V2A 1.4301 stainless steel protects the sides and gives the system a robust, visually seamless finish.

Additional space for parcels, newspapers and more

This compartment serves as a parcel box, complementing mail reception by accepting parcels even when you are not at home. The selected BASIC series parcel lock with T-handle allows deliveries without giving the courier a key. Use your key to release the compartment for a single delivery. The courier opens the released compartment, places the parcel inside, closes the door and pushes the lock in to secure it. To collect your parcel, open the compartment with your key, then release it again for the next delivery. Until then, it cannot accept further keyless deliveries. The external box dimensions are 370 × 550 × 385 mm (W × H × D). The clear door opening and usable internal dimensions determine which parcel sizes will fit; the external dimensions do not indicate the maximum parcel size. Please check the parcel size against the internal compartment dimensions beforehand.

Materials and workmanship

Base material: V2A 1.4301 stainless steel. V2A stainless steel provides a corrosion-resistant, durable foundation for your entrance area.

The powder-coated surface is finished in your choice of RAL colour. Select your preferred colour in the 3D configurator.

Mailbox and ease of use

Mailbox 370 × 110 × 385 mm: includes a rainwater run-off edge for optimum protection against water, a continuous rubber lip for quiet mail delivery, a solid nameplate with replaceable insert and a very robust lock. The height of the mail slot and the narrowing of the chute help protect your post against unauthorised removal.

Features

BASIC plastic nameplate, type 2: nameplate made from crystal-clear polycarbonate. The insert can be replaced from the front.

Features of this mailbox system

- Product range: BASIC Horizontal
- Mounting: pillar
- Finish: choice of RAL colour
- Overall dimensions: W 383 × H 1472 × D 430 mm
- 4 mailboxes, 1 functional module, 1 accessory box
- Box finish: choice of RAL colour
- Fixing method: bolt-down posts
- Base material: V2A 1.4301 stainless steel. Finish: powder coating or brushed stainless steel

Important information:

Protection against water: a sheltered location, ideally under a canopy, helps protect your post. Mail should be inserted fully and the mail flap should be closed.

Installation: the selected system requires a suitable load-bearing base. Please follow the installation instructions and take the configured fixing method into account.

Product properties

Series	BASIC
Functions	Parcel compartment
Number of boxes	with 1 parcel box, with 4 letterboxes
Name labelling	Nameplate
Mounting type	Free-standing
Material	Stainless steel V2A 1.4301
Removal of mail	On the front
Surface/colour	RAL of your choice (according to colour table)

Dimensions

Height of single box in mm	110
Width of single box in mm	370
Overall height in mm	1472
Total width in mm	383
Depth in mm	430

Dimension drawing

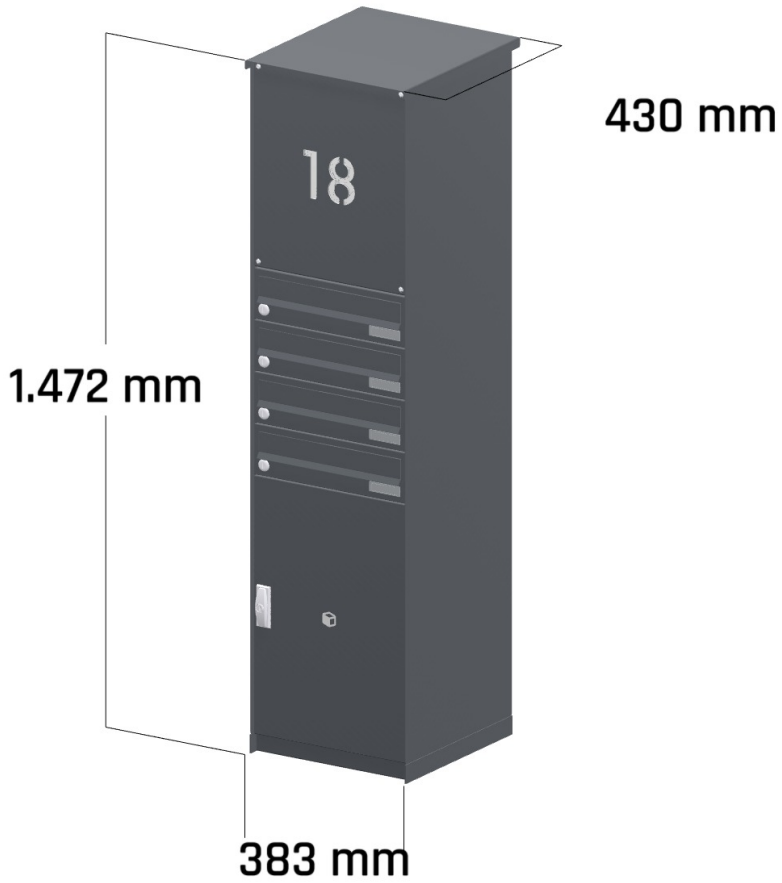

Briefkasten Manufaktur Lippe GmbH
Werler Straße 60
32105 Bad Salzuflen

www.briefkasten-manufaktur.de
info@briefkasten-manufaktur.de
Tel.: +49 5222 807110

Geschäftsführer Oliver Woineck
Ust.ID.Nr. DE303690847
Handelsregister Amtsgericht Lemgo, HRB 8618

More images



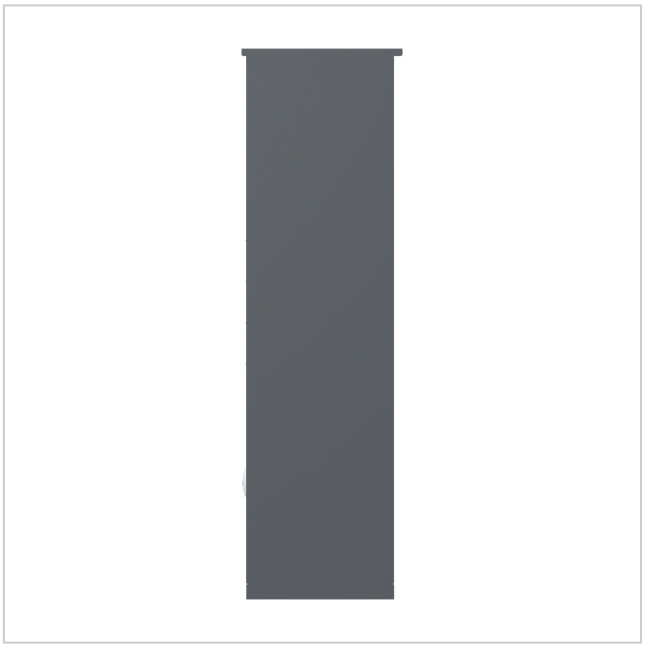

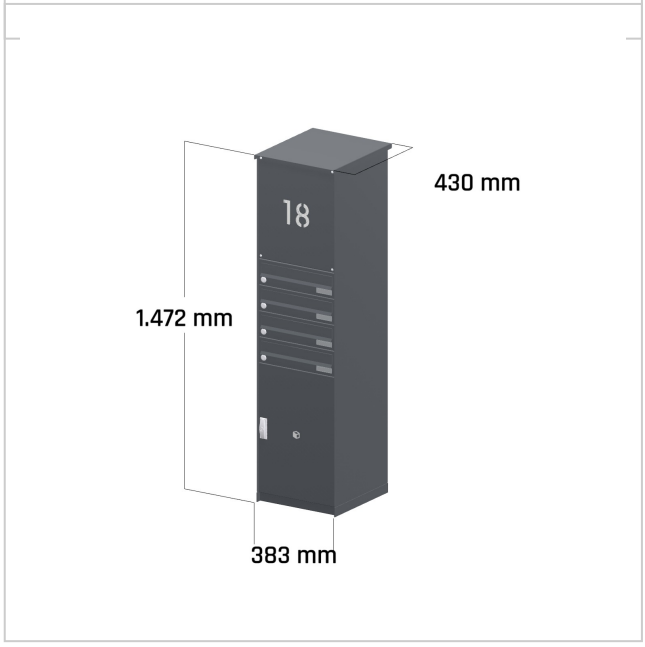

Briefkasten Manufaktur Lippe GmbH
Werler Straße 60
32105 Bad Salzuflen

www.briefkasten-manufaktur.de
info@briefkasten-manufaktur.de
Tel.: +49 5222 807110

Geschäftsführer Oliver Woineck
Ust.ID.Nr. DE303690847
Handelsregister Amtsgericht Lemgo, HRB 8618