23-unit freestanding mailbox system Design BASIC 385-7016 ST-R - RAL 7016 anthracite grey | RAL 7016 Anthracite grey, fine texture, matt | 300x110x385 mm (WxHxD) - ?? Normal 12 litres | with 23 mailboxes



Product number 385-7016-23W

Product description

Freestanding 23-unit mailbox system BASIC 385 for 23 units – wide, multi-column version – RAL 7016 Anthracite grey

For larger apartment buildings, residential complexes and demanding commercial properties, the free-standing BASIC 385 as a system for 23 units provides a durable and clear entrance solution. The independent stand mounting allows the mailbox system to be positioned to suit the plot and access situation.

The W configuration distributes the mail compartments in a wider, multi-column system layout and creates a clear front for multiple users.

The mailboxes are made of galvanised steel and are powder-coated in RAL 7016 Anthracite grey fine-texture matt. A close-fitting side cladding with rain canopy unites the individual mailboxes into a continuous overall system.

Each compartment has an insertion slot of 35 × 265 mm for DIN C4 items in portrait orientation. A noise-dampening rubber lip reduces impact noise, while the front access doors open from left to right. Each mailbox comes with two keys with key number and a replaceable nameplate beneath the insertion flap.

The advantages of the BASIC 385 at a glance

Solid stainless steel support posts

Round-tube support posts with approx. 60 mm diameter made of brushed stainless steel V2A 1.4301 form a stable base for the free-standing mailbox system. The robust construction is designed for long-term use at the property entrance.

Large insertion slot compliant with DIN EN 13724

Briefkasten Manufaktur Lippe GmbH
Werler Straße 60
32105 Bad Salzuflen

www.briefkasten-manufaktur.de
info@briefkasten-manufaktur.de
Tel.: +49 5222 807110

Geschäftsführer Oliver Woineck
Ust.ID.Nr. DE303690847
Handelsregister Amtsgericht Lemgo, HRB 8618

The insertion opening of 35 × 265 mm is designed for DIN C4 items in portrait orientation. Larger envelopes can also be inserted without bending.

Quiet insertion and comfortable retrieval

A noise-dampening rubber lip reduces the impact of the insertion flaps. Mail is retrieved at the front via doors that open from left to right.

Durable RAL 7016 finish

The matt fine-texture surface in Anthracite grey combines a contemporary look with a resilient coating on the galvanised steel.

Proven BASIC quality Made in Germany

The combination of solid material selection, DIN EN 13724-compliant mail compartments and an assembly-friendly construction makes the BASIC 385 a long-lasting solution for daily use.

Equipment of the BASIC 385 mailbox system

Mailbox system

Design Wide, multi-column design
Number of mailboxes 23 individually usable mailboxes
Mailbox material Galvanised steel
Finish RAL 7016 Anthracite grey fine-texture matt
Rain canopy / side cladding Galvanised steel, powder-coated in RAL 7016 Anthracite grey fine-texture matt
Manufacture Made in Germany by Briefkasten Manufaktur Lippe

Mail and operation

Insertion opening 35 × 265 mm, suitable for DIN C4 portrait
Insertion flaps With noise-dampening rubber lip
Mail retrieval Front access
Door opening Opens from left to right
Keys 2 keys with key number per mailbox
Nameplate Replaceable nameplate beneath the insertion flap
Standard Mailboxes compliant with DIN EN 13724

Support posts and equipment

Support posts Round tube approx. 60 mm of stainless steel V2A 1.4301, brushed
Mounting types Optionally for bolt-down installation or embedding in concrete
Fastening Anchor bolts for bolt-down installation not included; select suitable anchors for the foundation separately

Mailbox size and volume

The BASIC 385 is available with different mailbox sizes depending on the product configuration. The standard version 300 × 110 × 385 mm offers approx. 12 litres volume; depending on the variant, 300 × 220 × 385 mm with approx. 25 litres volume is also available.

Briefkasten Manufaktur Lippe GmbH
Werler Straße 60
32105 Bad Salzuflen

www.briefkasten-manufaktur.de
info@briefkasten-manufaktur.de
Tel.: +49 5222 807110

Geschäftsführer Oliver Woineck
Ust.ID.Nr. DE303690847
Handelsregister Amtsgericht Lemgo, HRB 8618

Installation by embedding in concrete

For the free-standing system we recommend a sufficiently dimensioned concrete foundation. When embedding, the stainless steel support posts must be set plumb and permanently anchored in the foundation. Foundation size and embedment depth must be matched to ground conditions, system weight and local circumstances.

Bolt-down installation on a foundation

For bolt-down installation a level, load-bearing concrete foundation is required. Suitable anchor bolts or fasteners should be selected to suit the substrate and the system load. For the BASIC-385-ST-R variants, anchor bolts are not included in the standard scope of delivery.

Note on weather protection

Mail items are best protected from moisture and dirt when fully inserted and the insertion flap is closed. Protruding items can prevent the flap from closing completely. In extreme weather conditions, moisture may enter the mailbox despite a standards-compliant design.

Product properties

Material	Steel, galvanised, Stainless steel V2A 1.4301
Surface/colour	RAL 9005 deep black, RAL 3004 crimson red, DB 703 iron mica, RAL 7016 anthracite grey, RAL of your choice (according to colour table), Brushed, RAL 9007 grey aluminium, RAL 9016 traffic white
Series	BASIC
Boxes by volume	Normal > 10 litres
Name labelling	Nameplate
Mounting type	Free-standing
Number of boxes	with 23 letterboxes
Removal of mail	On the front

Briefkasten Manufaktur Lippe GmbH
Werler Straße 60
32105 Bad Salzuflen

www.briefkasten-manufaktur.de
info@briefkasten-manufaktur.de
Tel.: +49 5222 807110

Geschäftsführer Oliver Woineck
Ust.ID.Nr. DE303690847
Handelsregister Amtsgericht Lemgo, HRB 8618

Dimensions

Height of single box in mm	110.0
Width of single box in mm	300.0
Capacity in litres	12
Height of letterbox slot in mm	35.0
Width of letter slot in mm	265.0
Height of letterbox in mm	880.0
Width of letterbox system in mm	900.0
Overall height in mm	1500.0 | 1700.0
Total width in mm	1065.0
Depth in mm	435.0
Weight in kg	98
Delivery condition	Delivery is made in blocks, freestanding elements / mailbox divided

Dimension drawing

Briefkasten Manufaktur Lippe GmbH
Werler Straße 60
32105 Bad Salzuflen

www.briefkasten-manufaktur.de
info@briefkasten-manufaktur.de
Tel.: +49 5222 807110

Geschäftsführer Oliver Woineck
Ust.ID.Nr. DE303690847
Handelsregister Amtsgericht Lemgo, HRB 8618

Montagebohrungen

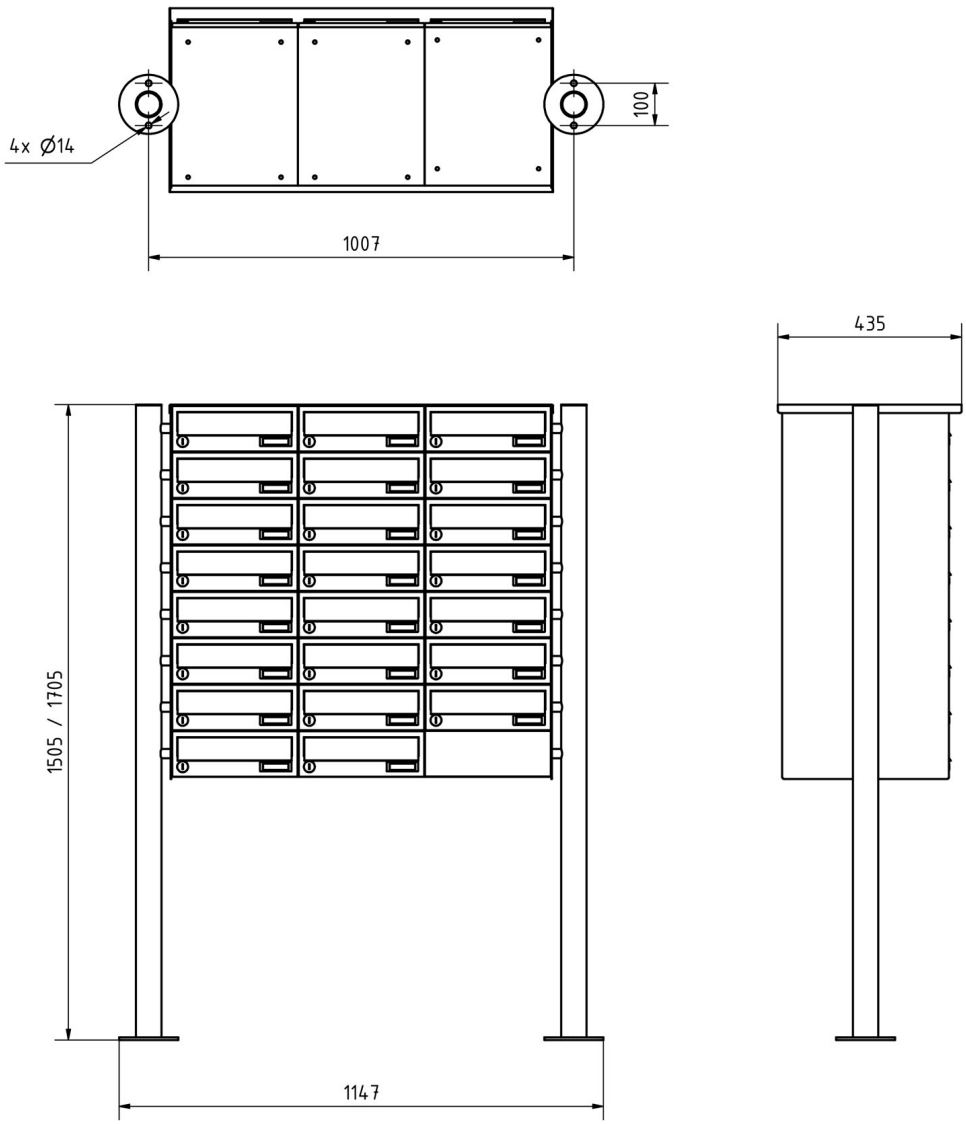

Briefkasten Manufaktur Lippe GmbH
Werler Straße 60
32105 Bad Salzuflen

www.briefkasten-manufaktur.de
info@briefkasten-manufaktur.de
Tel.: +49 5222 807110

Geschäftsführer Oliver Woineck
Ust.ID.Nr. DE303690847
Handelsregister Amtsgericht Lemgo, HRB 8618

More images









Briefkasten Manufaktur Lippe GmbH
Werler Straße 60
32105 Bad Salzuflen

www.briefkasten-manufaktur.de
info@briefkasten-manufaktur.de
Tel.: +49 5222 807110

Geschäftsführer Oliver Woineck
Ust.ID.Nr. DE303690847
Handelsregister Amtsgericht Lemgo, HRB 8618



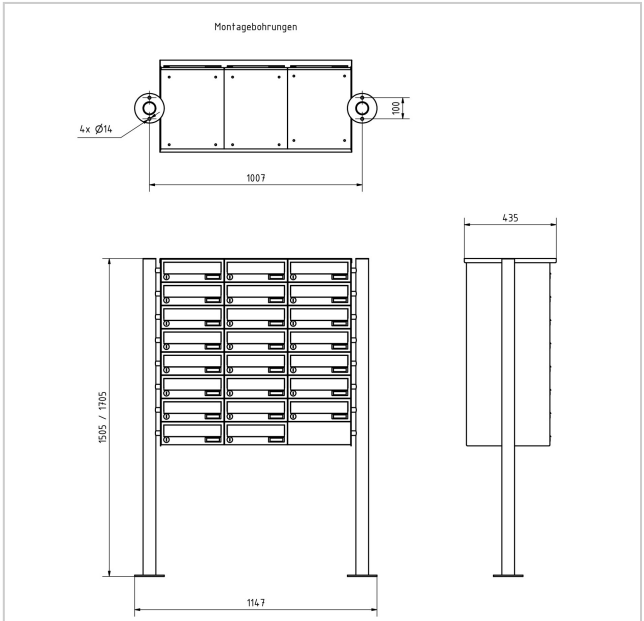

Briefkasten Manufaktur Lippe GmbH
Werler Straße 60
32105 Bad Salzuflen

www.briefkasten-manufaktur.de
info@briefkasten-manufaktur.de
Tel.: +49 5222 807110

Geschäftsführer Oliver Woineck
Ust.ID.Nr. DE303690847
Handelsregister Amtsgericht Lemgo, HRB 8618