Doorbell pedestal designer - stainless steel V2A powder-coated - 5 party - INDIVIDUAL | 5 | Individualised preparation | 160 cm | ? Colour of your choice



Product number 870-VAR-5-IND-160

Product description

Bell pillar designer - stainless steel V2A powder-coated - 5 parties - INDIVIDUAL

High-quality doorbell pedestal for 5 parties made entirely of V2A stainless steel, powder-coated by Briefkasten Manufaktur. This bell pillar is available with 1-6 bell buttons. An optional speech hole, camera and house number can be prepared. Our products have a high quality, reliable functionality and their own identity. Made by Briefkasten Manufaktur.

Briefkasten Manufaktur Lippe GmbH
Werler Straße 60
32105 Bad Salzuflen

www.briefkasten-manufaktur.de
info@briefkasten-manufaktur.de
Tel.: +49 5222 807110

Geschäftsführer Oliver Woineck
Ust.ID.Nr. DE303690847
Handelsregister Amtsgericht Lemgo, HRB 8618

- Bell pillar made of 1.5 mm stainless steel V2A 1.4301, powder-coated.
- The system is manufactured by Briefkasten Manufaktur. German quality production "Made in Germany".
- The speech part is made of 2 mm stainless steel V2A 1.4301, powder-coated. Dimensions: W 190 mm x H 640 mm x D 110 mm.
- House number approx. 70 mm high (max. 3 digits) with energy-saving LED lighting 12V DC approx. 50mA / 1W, white.
- Replaceable Plexiglas nameplate, optionally illuminated.
- The inscriptions on the name plates can be changed from the front as required.
- Incl. EVN LED power supply unit / transformer IP65 12V/DC 0.1-4W for LED lighting (house number and nameplate if selected).
- 5x round stainless steel bell push-buttons, optionally with LED ring lighting.
- Preparation (built-in loudspeaker not included) for intercom system possible.
- Optionally with universal adapter for all commercially available built-in loudspeakers.
- Optional preparation (camera not included in scope of delivery) for a camera.
- Incl. 6x screw cover caps made of V2A stainless steel, polished so that the screws for fastening the front panel are not visible. See pictures.
- The fully welded stand column is made of 1.5 mm V2A stainless steel, powder-coated. Construction height is either 1.30 m or 1.60 m.
- The pedestal is equipped with a VA base plate. This is 10 mm thick and is finished with a cover plate. See pictures.
- Invisible cable feed through the body is possible.

Important information

Water protection

To achieve optimum water protection for your mail, the letterbox or letterbox system should be located under a canopy if possible.

The mail is only protected from water if it is fully inserted in the box and the flap is closed. Mail that is not fully inserted allows moisture and dirt to penetrate the letterbox. It is therefore necessary to plan sufficiently dimensioned letterboxes for the upcoming requirements. Under certain extreme weather conditions, water can still enter (up to 1ccm according to DIN EN 13724). This is not a reason for complaint.

Product properties

Surface/colour	RAL 9005 deep black, RAL 3004 crimson red, DB 703 iron mica, RAL 7016 anthracite grey, RAL of your choice (according to colour table), RAL 9007 grey aluminium, RAL 9016 traffic white
Series	GRIMM
Functions	Light button, Camera, Intercom, Fingerprint, Keypad
Functional box prepared for manufacturer	LOXONE, GIRA, Busch Jaeger, Siedle, STR Elektronik, ELCOM, TCS, Ritto, ALGO, Telegärtner, Auerswald, Legrand Bticino, HHG, HIKVISION, PCS, Sesam, ekey, Comelit, Schneider Intercom / COMMEND
Name labelling	Nameplate
Mounting type	Free-standing
Material	Stainless steel V2A 1.4301
House number	House number as laser engraving, House number as laser cut, illuminated

Briefkasten Manufaktur Lippe GmbH
Werler Straße 60
32105 Bad Salzuflen

www.briefkasten-manufaktur.de
info@briefkasten-manufaktur.de
Tel.: +49 5222 807110

Geschäftsführer Oliver Woineck
Ust.ID.Nr. DE303690847
Handelsregister Amtsgericht Lemgo, HRB 8618

Dimensions

Height of single box in mm	640,0
Width of single box in mm	190,0
Overall height in mm	1300,0 | 1600,0
Total width in mm	220.0 (foot plate 320.0)
Depth in mm	110.0 (foot plate 210.0)
Weight in kg	40
Delivery condition	Delivery is assembled

Dimension drawing

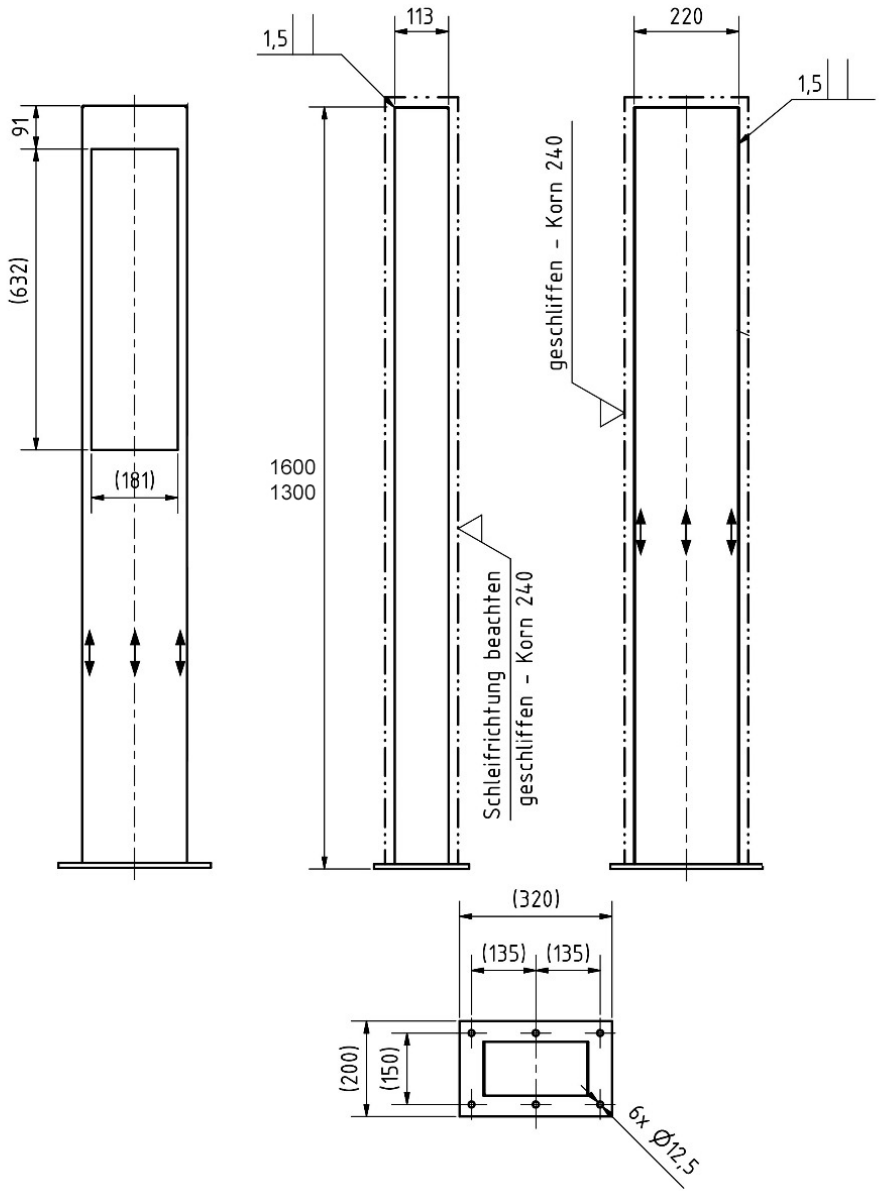

More images





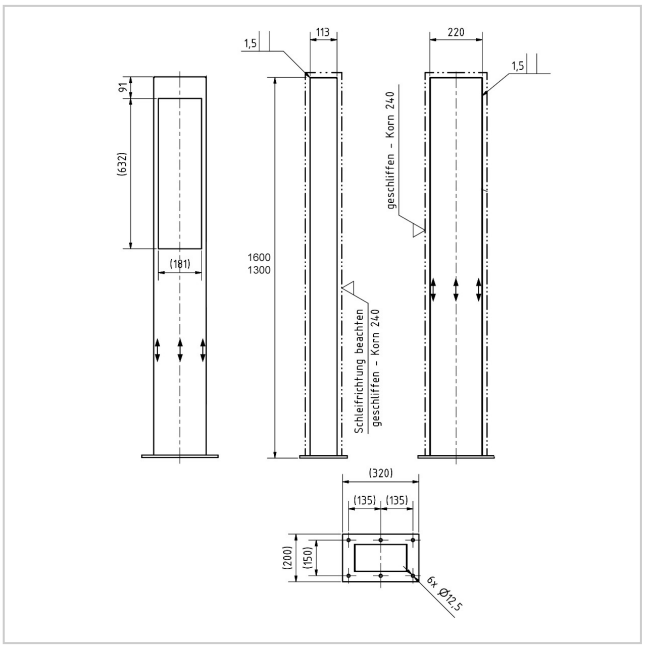



Briefkasten Manufaktur Lippe GmbH
Werler Straße 60
32105 Bad Salzuflen

www.briefkasten-manufaktur.de
info@briefkasten-manufaktur.de
Tel.: +49 5222 807110

Geschäftsführer Oliver Woineck
Ust.ID.Nr. DE303690847
Handelsregister Amtsgericht Lemgo, HRB 8618





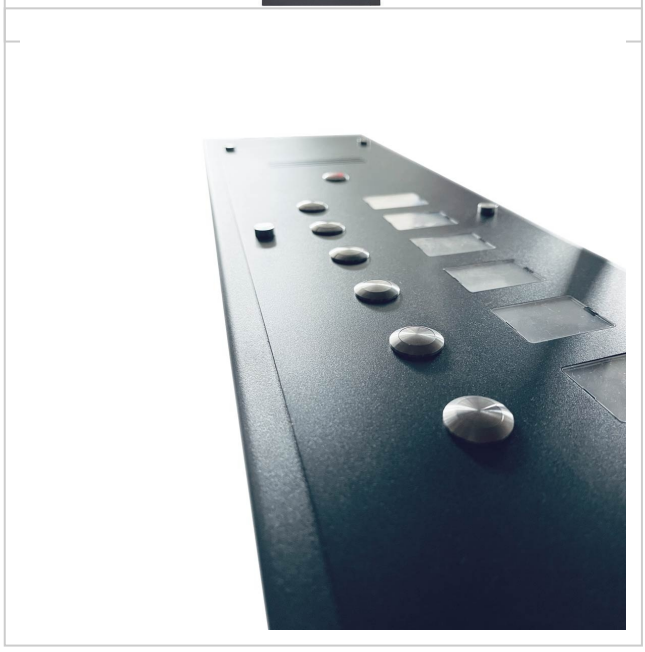

Briefkasten Manufaktur Lippe GmbH
Werler Straße 60
32105 Bad Salzuflen

www.briefkasten-manufaktur.de
info@briefkasten-manufaktur.de
Tel.: +49 5222 807110

Geschäftsführer Oliver Woineck
Ust.ID.Nr. DE303690847
Handelsregister Amtsgericht Lemgo, HRB 8618