Design wall light FISCHER BIG 415x100 - 2-sided - stainless steel powder-coated - RAL of your choice | 415mm x 100mm | ? Colour of your choice



Product number 632R

Product description

Design wall light FISCHER BIG 415x100 - 2-sided - powder-coated stainless steel - RAL colour of your choice

High-quality, powder-coated stainless steel wall light for indoor and outdoor use. This luminaire with warm white light colour has a light outlet on both the top and bottom.

- The wall light is made of cast aluminium, stainless steel and opal glass.
- Integrated LED module 2 x 9.6 W incl. converter, direct connection 230 V, 50 Hz, light colour warm white, 3000° K .
- Protective conductor connection.
- Protection class IP 44 - splash-proof.
- With cast aluminium mounting plate for fixing.
- 2 fixing holes Ø 6x10 in wall plate, horizontal spacing 310mm, cable entry with cable grommet for connection cable max. 3 x 1.5mm², connection terminal 2 x 2.5mm.
- CE mark of conformity.
- Manufactured by Gebrüder Albert GmbH & Co KG Leuchtenfabrik - Quality Made in Germany (Fröndenberg).

Installation:

The national and international electronic safety regulations must be observed for the installation and operation of this luminaire. Loosen the wall plate from the luminaire fitting using the four hexagon socket set screws, pull the mains connection cable through the existing cable grommet and screw the wall plate to the mounting base. Make the protective conductor connection and electrical connection to the terminal. Fix the luminaire fitting over the wall plate and tighten it against the wall plate using the four hexagon socket set screws.

Briefkasten Manufaktur Lippe GmbH
Werler Straße 60
32105 Bad Salzuflen

www.briefkasten-manufaktur.de
info@briefkasten-manufaktur.de
Tel.: +49 5222 807110

Geschäftsführer Oliver Woineck
Ust.ID.Nr. DE303690847
Handelsregister Amtsgericht Lemgo, HRB 8618

Product properties

Surface/colour	RAL 9005 deep black, DB 703 iron mica, RAL 7016 anthracite grey, RAL of your choice (according to colour table), RAL 9007 grey aluminium, RAL 9016 traffic white
Protection type	IP44
Illuminants	2x LED, 9,6 Watt
Material	Aluminium AlMg3 W19, Stainless steel V2A 1.4301
Protection class	I

Briefkasten Manufaktur Lippe GmbH
Werler Straße 60
32105 Bad Salzuflen

www.briefkasten-manufaktur.de
info@briefkasten-manufaktur.de
Tel.: +49 5222 807110

Geschäftsführer Oliver Woineck
Ust.ID.Nr. DE303690847
Handelsregister Amtsgericht Lemgo, HRB 8618

Dimensions

Width in mm	205
Height in mm	105
Total width in mm	205
Depth in mm	90,0
Delivery condition	Supplied fully assembled

Dimension drawing

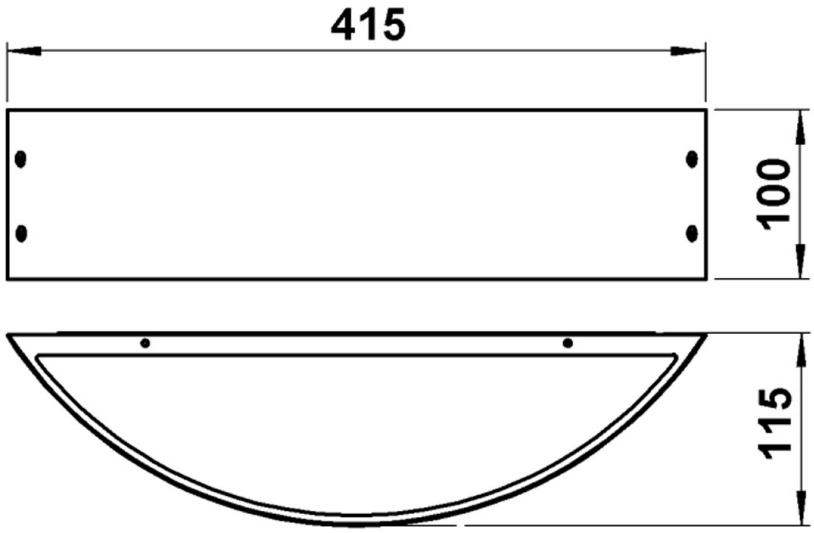

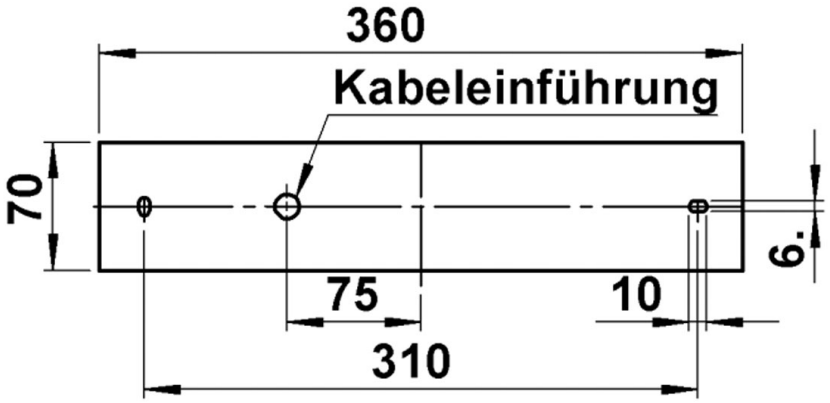

Briefkasten Manufaktur Lippe GmbH
Werler Straße 60
32105 Bad Salzuflen

www.briefkasten-manufaktur.de
info@briefkasten-manufaktur.de
Tel.: +49 5222 807110

Geschäftsführer Oliver Woineck
Ust.ID.Nr. DE303690847
Handelsregister Amtsgericht Lemgo, HRB 8618

More images



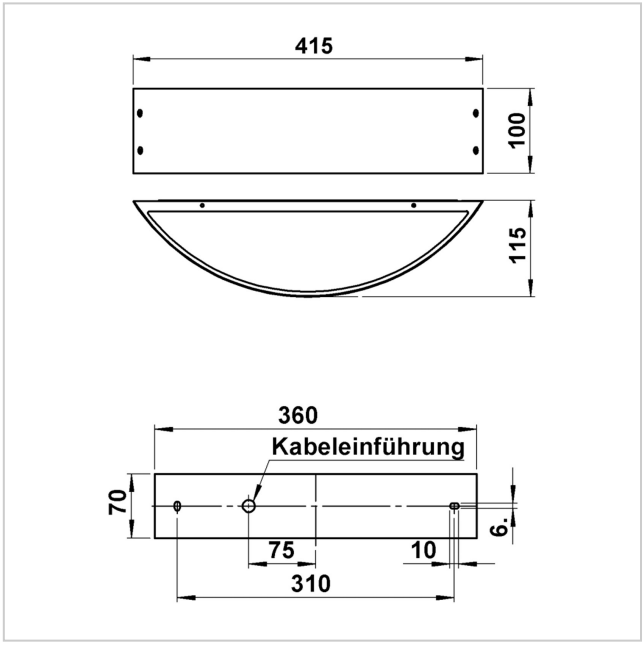

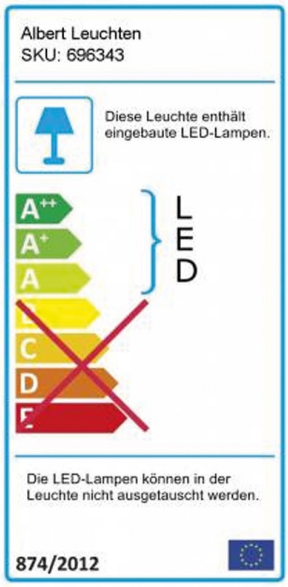

Briefkasten Manufaktur Lippe GmbH
Werler Straße 60
32105 Bad Salzuflen

www.briefkasten-manufaktur.de
info@briefkasten-manufaktur.de
Tel.: +49 5222 807110

Geschäftsführer Oliver Woineck
Ust.ID.Nr. DE303690847
Handelsregister Amtsgericht Lemgo, HRB 8618