GOETHE letterbox system with storage compartment and Push-Key lock – flush mounting – choice of RAL colour

Product number BML3D-ZSB55C73Z2



Product description

GOETHE flush-mounted system to Swiss PTT postal standards in your choice of RAL colour

This letterbox system from the GOETHE series combines a letterbox with a separate newspaper/storage compartment. The flush-mounted version features a plaster trim frame for a neat finish against the wall surface and complies with Swiss PTT postal standards.

The stainless steel construction is powder-coated in your choice of RAL colour. The selected configuration includes a mechanical Push-Key lock on the letterbox and two nameplates with inserts that can be changed from the front.

Features of this letterbox system

- Overall external dimensions: 452 × 452 × 411 mm (W × H × D).
- Configuration: 1 letterbox and 1 accessory box serving as a newspaper/storage compartment; both accessible from the front.
- External dimensions of each box: 400 × 200 × 400 mm (W × H × D). External dimensions do not represent usable internal dimensions.
- Installation: flush mounting with a plaster trim frame made from 1,5 mm thick V2A 1.4301 stainless steel.
- Material: body made from 1.4016 stainless steel, faceplates and frame made from V2A 1.4301 stainless steel.
- Finish: powder coating in your choice of RAL colour.
- Manufactured to Swiss PTT postal standards.
- Letterbox with a keyed-to-differ Push-Key lock, an individual key number and two keys.
- Two BASIC type 2 nameplates made from crystal-clear polycarbonate, including a “No advertising, thank you” insert.

Special features of this letterbox system

Briefkasten Manufaktur Lippe GmbH
Werler Straße 60
32105 Bad Salzuflen

www.briefkasten-manufaktur.de
info@briefkasten-manufaktur.de
Tel.: +49 5222 807110

Geschäftsführer Oliver Woineck
Ust.ID.Nr. DE303690847
Handelsregister Amtsgericht Lemgo, HRB 8618

Push-Key lock on the letterbox

The Push-Key lock is entirely mechanical. To open it, simply insert the key; no turning is required. To close it, push the flap shut.

The keyed-to-differ lock has an individual key number and is supplied with two keys. This lock is fitted to the letterbox only.

Damped letter flap and thoughtfully designed mail retrieval

The letterbox has a damped letter flap for quiet mail delivery. A rainwater run-off edge and a continuous rubber lip help protect against water ingress.

The letter slot is designed for DIN-C4 envelopes. The height of the slot and the tapered chute make unauthorised removal through the slot more difficult. The retrieval door is designed to prevent mail from falling out when opened.

Separate newspaper/storage compartment

The additional stainless steel compartment provides space for newspapers and magazines. It is accessible from the front and opens upwards from the bottom.

Two nameplates with an advertising notice

The two BASIC type 2 nameplates are made from crystal-clear polycarbonate. You can change their inserts from the front.

The supplied “No advertising, thank you” insert lets you indicate directly on the system that you do not wish to receive advertising material.

Individually configurable

Tailor your letterbox system to your home: select “Configure now” to adapt this configuration to your requirements.

- Box finish: adjust the colour in the 3D configurator using the colours available for this version.
- Personalised lettering: customise the designated areas with your own names, house numbers or text of your choice. Any lettering shown is an example and can be replaced.
- Lettering style: choose from the fonts available for lettering and adjust the appearance in the configurator.
- Equipment: add or change compatible components using the selection currently available for this system.

When you make individual changes, the dimensions and price are recalculated in the 3D configurator to reflect your selection.

Important information

Water protection: a sheltered location, ideally under a canopy, helps protect your mail. Mail should be fully inserted and the letter flap kept closed.

Installation: check the mounting surface and installation conditions against the overall dimensions and installation instructions.

Product properties

Series	GOETHE
Access control	Push-Key
Name labelling	Nameplate
Material	Stainless steel V2A 1.4301, Stainless steel 1.4016 (non-rusting magnetic stainless steel)
Removal of mail	On the front
Surface/colour	RAL of your choice (according to colour table)
Number of boxes	with 1 letterbox
Mounting type	Flush-mounted

Briefkasten Manufaktur Lippe GmbH
Werler Straße 60
32105 Bad Salzuflen

www.briefkasten-manufaktur.de
info@briefkasten-manufaktur.de
Tel.: +49 5222 807110

Geschäftsführer Oliver Woineck
Ust.ID.Nr. DE303690847
Handelsregister Amtsgericht Lemgo, HRB 8618

Dimensions

Height of single box in mm	200
Width of single box in mm	400
Overall height in mm	452
Total width in mm	452
Depth in mm	411

Dimension drawing

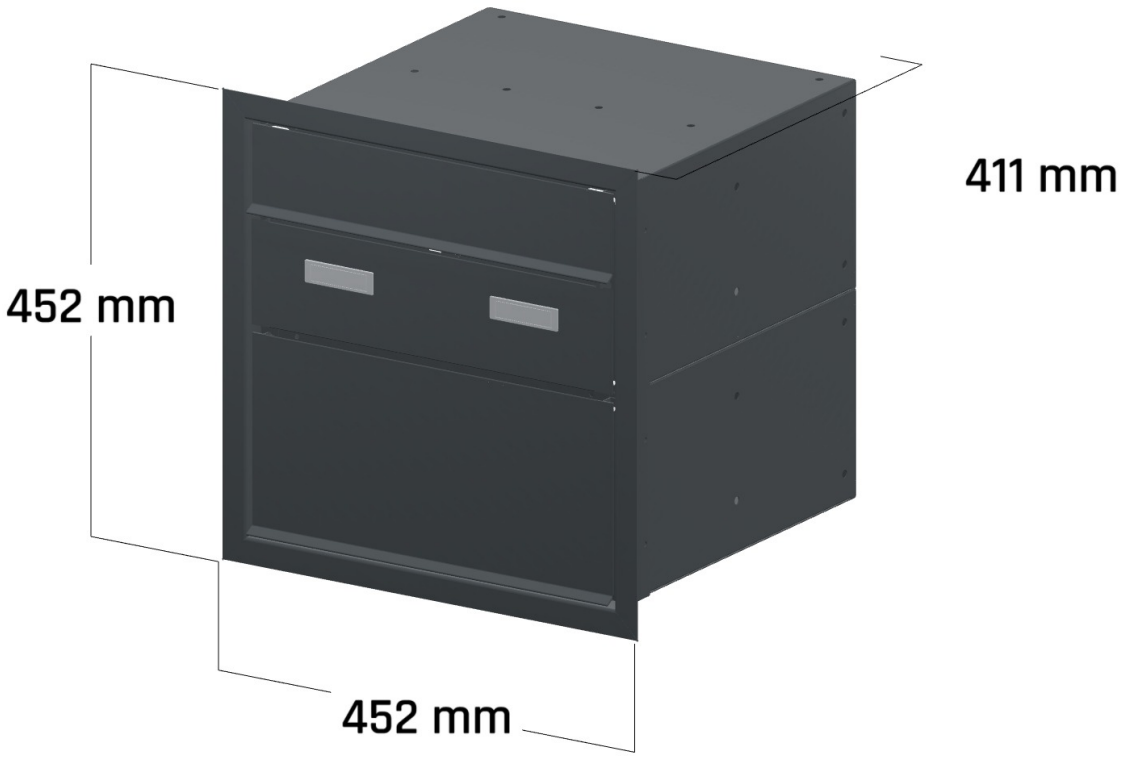

Briefkasten Manufaktur Lippe GmbH
Werler Straße 60
32105 Bad Salzuflen

www.briefkasten-manufaktur.de
info@briefkasten-manufaktur.de
Tel.: +49 5222 807110

Geschäftsführer Oliver Woineck
Ust.ID.Nr. DE303690847
Handelsregister Amtsgericht Lemgo, HRB 8618

More images



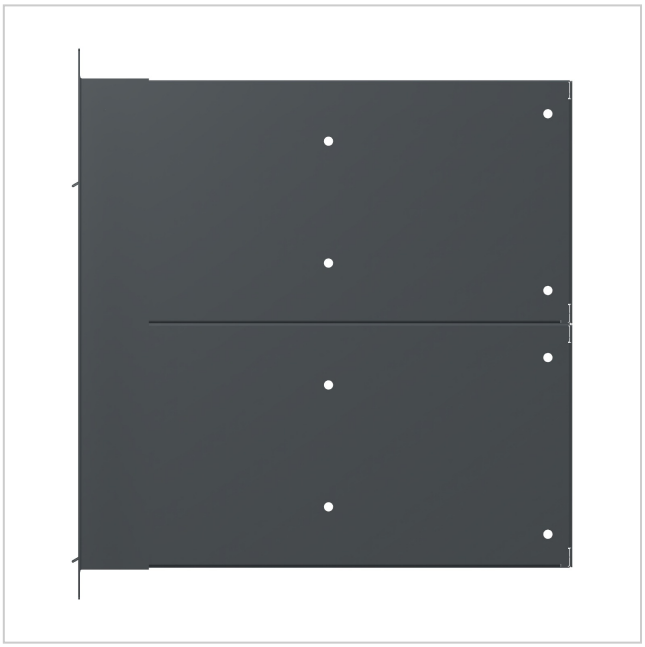

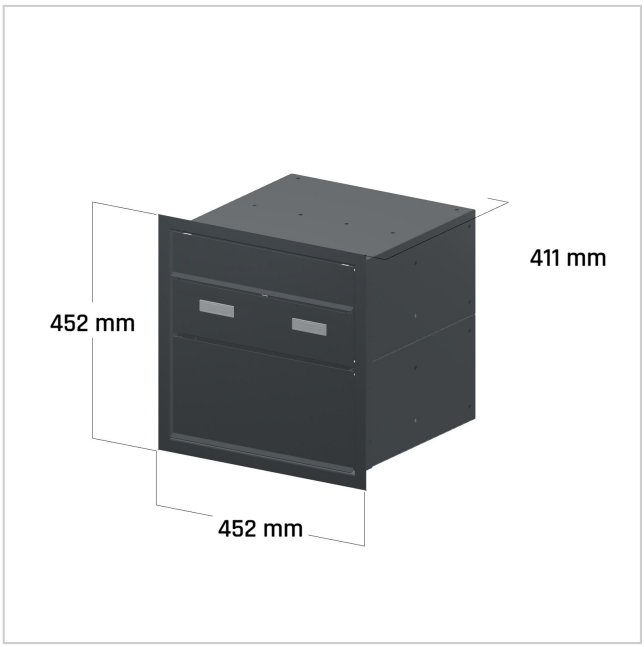



Briefkasten Manufaktur Lippe GmbH
Werler Straße 60
32105 Bad Salzuflen

www.briefkasten-manufaktur.de
info@briefkasten-manufaktur.de
Tel.: +49 5222 807110

Geschäftsführer Oliver Woineck
Ust.ID.Nr. DE303690847
Handelsregister Amtsgericht Lemgo, HRB 8618