Stainless steel charging station Draw BASIC Charge 1X - 22 kW / 32 A with 1x Type 2 charging cable | Brushed stainless steel front panel | Body in colour of your choice | Right | Overall height 1300mm



Product number 90040-BC1X-1300-R-VARAL

Product description

Charging pole Draw BASIC Charge 1X - 22kW/32A with 1x type 2 charging cable

The high-quality Draw charging pole with type 2 charging cable (5.0 m) is ideal for areas with high demands on design, functionality and safety. As a multiple solution for demanding car park environments or as a single solution for the home. The simple design blends in harmoniously. The Draw charging pole is equipped with a key switch incl. 2 keys with key number, so access is only possible when the key switch is switched on. The complete charging pole is made of stainless steel V2A 1.4301 and is ground with 240 grain or powder-coated in RAL colour.

Long durability and easy maintenance are guaranteed by the selected materials. The no-frills design and functional construction make the charging pole easy to care for, clean and maintain. BMLsystems also emphasises the highest quality when selecting the right material. The stainless steel material fulfils all conditions in an outstanding manner and has an extremely high corrosion resistance and an always striking surface finish.

Optional labelling with our high-quality laser engraving is possible, so that car park numbers, names or pictograms can be lasered on. Please feel free to ask us about this.

Simple installation by a specialised electrical company

The Draw charging pole is pre-installed ready for connection. All your electrician has to do is wire the supply line and add the sub-distribution board and you can start charging straight away. Thanks to its solid construction, the charging pole is ideally protected against vandalism and if something does get damaged, you can simply replace the defective components. The Draw charging pole is very easy to access thanks to the inspection flap on the back and is extremely simple to install and maintain. The modular design means that all components, from the cover to the charging unit, can be replaced at any time.

Briefkasten Manufaktur Lippe GmbH
Werler Straße 60
32105 Bad Salzuflen

www.briefkasten-manufaktur.de
info@briefkasten-manufaktur.de
Tel.: +49 5222 807110

Geschäftsführer Oliver Woineck
Ust.ID.Nr. DE303690847
Handelsregister Amtsgericht Lemgo, HRB 8618

The charging system - BASIC Charge 1X

With a flexible charging capacity of up to 22kW/32A 3-phase, the BC1X is compatible with all type 2 electric cars. The BC1X is authorised in the Draw charging station using a key switch.

Features

- Charging pole for free-standing installation with front panel made of 2mm stainless steel V2A 1.4301.
- Front panel optionally available in 240 grain polished or RAL/DB colour of your choice.
- Quality production - Made in Germany - BMLsystems.
- With key switch: holiday configuration, so when switched on the key can be removed and always charged.
- Status display with LED indicator light.
- Integrated BC1X charging system for fast charging with 22 kW (up to 10 times faster than a normal household socket).
- Charging time approx. 60 minutes (depending on battery capacity and charging power of the electric vehicle)*.
- High-quality AC charging system - Made in Germany - Phoenix Contact (CHARX) integrated.
- Includes printed installation instructions, operating instructions and declaration of conformity.
- High degree of protection and therefore usable in any weather situation (protection class IP54).
- Integrated AC/DC residual current detection.
- The fully welded charging pole is made of 2 mm stainless steel V2A 1.4301.
- Invisible cable feed through the body.
- Rear inspection flap with ventilation openings.

***Based on the maximum output power, an average expected battery capacity of 20 kWh and a charger in the vehicle corresponding to the maximum output power.**

Dimensions

- Stele dimensions: H 1300 mm | 1800 mm x W 290 mm x D 182 mm.
- Base plate dimensions: H 10 mm x W 380 mm x D 272 mm.
- Weight: approx. 55 kg | 65 kg.

Important information

Please note that professional installation by an electrician is required to use the wallbox included.

Briefkasten Manufaktur Lippe GmbH
Werler Straße 60
32105 Bad Salzuflen

www.briefkasten-manufaktur.de
info@briefkasten-manufaktur.de
Tel.: +49 5222 807110

Geschäftsführer Oliver Woineck
Ust.ID.Nr. DE303690847
Handelsregister Amtsgericht Lemgo, HRB 8618

Product properties

Protective device	AC/DC-Fehlerstrom 30mA/6mA, RCD type B
Surface/colour	RAL 9005 deep black, RAL 3004 crimson red, DB 703 iron mica, RAL 7016 anthracite grey, RAL of your choice (according to colour table), Brushed, RAL 9007 grey aluminium, RAL 9016 traffic white
Access control	Key switch
Energy meter	w/o
Internet connection	LAN
Load switch	Installation contactor, 4-pin, 25 A
Integrated functions	Monitoring, Load management
Nominal frequency	50 / 60 Hz
Mounting type	Free-standing
Operating mode	Client, Server, Stand-Alone
Material	Stainless steel V2A 1.4301
Overvoltage category	III
Protocols	HTTPS, HTTP, OCPP 1.6J, Modbus TCP, MQTT
Storage ambient temperature	-35 °C bis +70 °C
Cable length	5,0m
Phases	3
Charging mode	Mode 3
Protection type	IP54
Charging connection	Type 2 charging cable
Operating ambient temperature	-25 °C bis +40 °C
Interfaces	Ethernet, RS-485 (energy meter, RFID reader), USB-C
Nominal voltage	220 ... 240 V / 380 ... 415 V
Max. charging power	11kW, 22kW
Charge controller	AC charging control CHARX by Phoenix Contact
Protection class	I
Nominal current	16A
Charging standard	IEC 61851-1

Briefkasten Manufaktur Lippe GmbH
Werler Straße 60
32105 Bad Salzuflen

www.briefkasten-manufaktur.de
info@briefkasten-manufaktur.de
Tel.: +49 5222 807110

Geschäftsführer Oliver Woineck
Ust.ID.Nr. DE303690847
Handelsregister Amtsgericht Lemgo, HRB 8618

Dimensions

Overall height in mm	1300,0 | 1800,0
Total width in mm	290.0 (footplate 380.0)
Depth in mm	182.0 (foot plate 272.0)
Weight in kg	55,0 | 65,0
Delivery condition	Supplied fully assembled

Dimension drawing

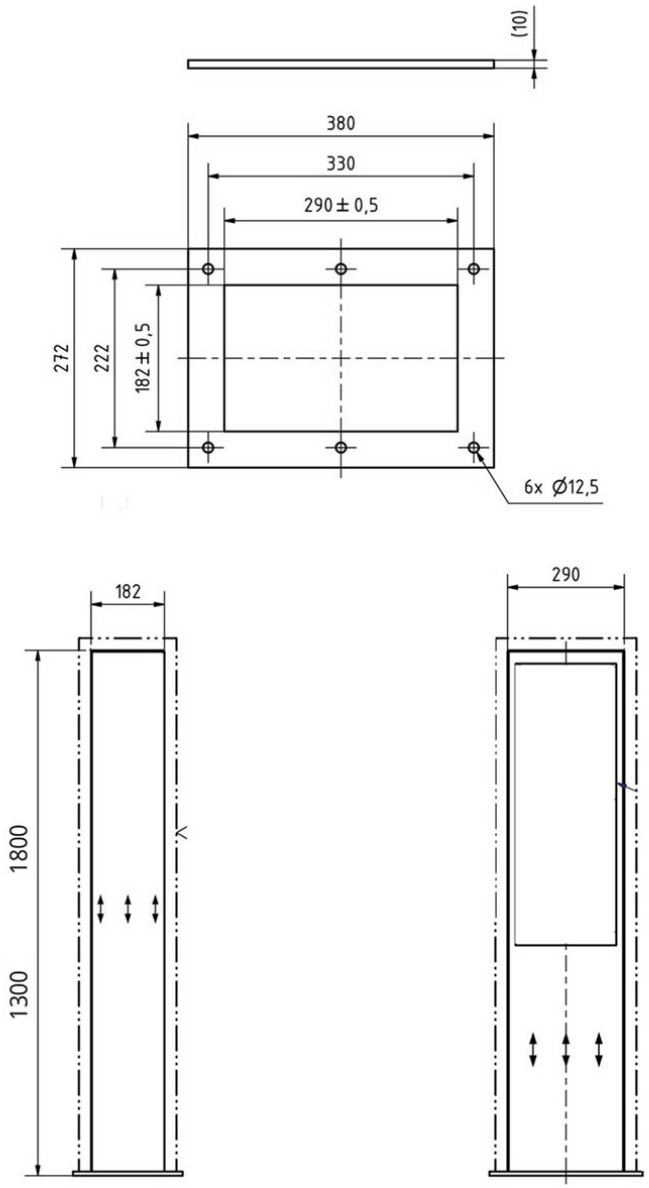

More images

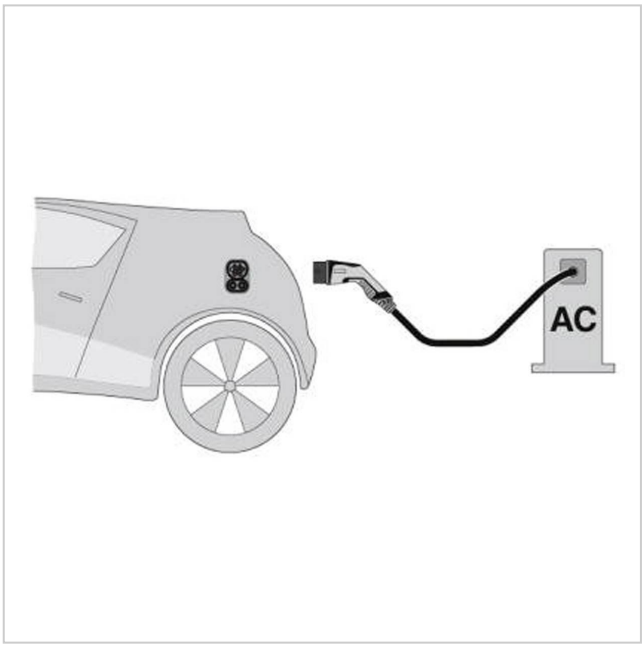







Briefkasten Manufaktur Lippe GmbH
Werler Straße 60
32105 Bad Salzuflen

www.briefkasten-manufaktur.de
info@briefkasten-manufaktur.de
Tel.: +49 5222 807110

Geschäftsführer Oliver Woineck
Ust.ID.Nr. DE303690847
Handelsregister Amtsgericht Lemgo, HRB 8618

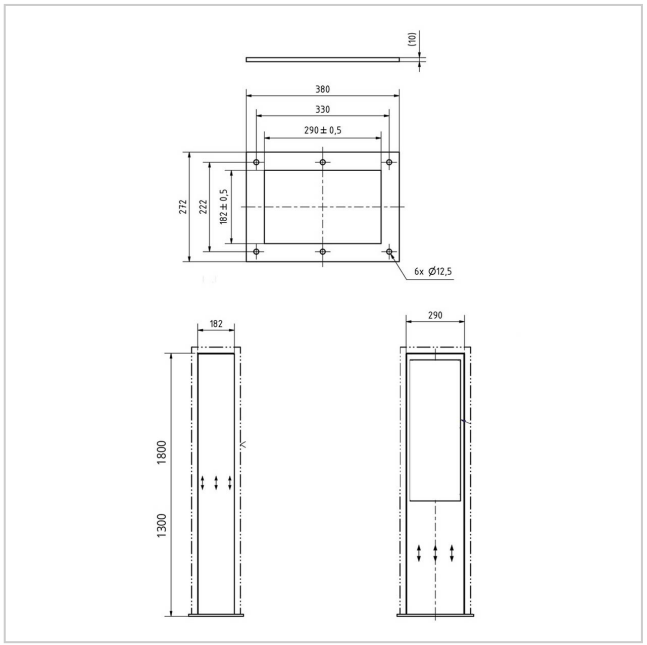







Briefkasten Manufaktur Lippe GmbH
Werler Straße 60
32105 Bad Salzuflen

www.briefkasten-manufaktur.de
info@briefkasten-manufaktur.de
Tel.: +49 5222 807110

Geschäftsführer Oliver Woineck
Ust.ID.Nr. DE303690847
Handelsregister Amtsgericht Lemgo, HRB 8618