6-unit 3x2 stainless steel surface-mounted mailbox Design BASIC Plus 382XA AP with doorbell box - V2A stainless steel | 100mm depth | with 6 letterboxes (3x2) | Top | Stainless steel, brushed



Product number 382XA-VA-6W-SP-100-O

Product description

6-unit 3×2 surface-mounted stainless steel mailbox Design BASIC Plus 382XA AP with bell box - Stainless steel V2A

High-quality surface-mounted mailbox for 4 households made in Germany by Briefkasten Manufaktur. The mailbox is made entirely of stainless steel V2A, brushed. The very high-quality workmanship and the well thought-out concept make this mailbox one of our bestsellers. A rain runoff edge for optimal water protection, a continuous rubber lip for quiet insertion, a sturdy interchangeable nameplate, a practical mail retention bar and the very robust lock characterise this surface-mounted mailbox.

The mailbox systems of the BASIC Plus collection are characterised by the consistent use of stainless steel V2A. The result is very high durability and sustainability. The construction has been developed by our own engineers with a view to high flexibility and modularity, easy spare-part installation and straightforward self-installation. Spare parts are directly available for all BASIC Plus systems.

Thanks to the design, self-installation is straightforward. The mailbox system is prepared for uncomplicated complete mounting; there is no need for complex wall mounting of individual boxes. 4-unit surface-mounted mailbox made from weather-resistant stainless steel V2A 1.4301, brushed 240-grit.

Advantages at a glance

Stainless steel side cladding with rain canopy

Side cladding and rain canopy are made from stainless steel V2A 1.4301, brushed 240-grit and complement the system as a structurally coordinated weather protection.

Generous letter slot

Briefkasten Manufaktur Lippe GmbH
Werler Straße 60
32105 Bad Salzuflen

www.briefkasten-manufaktur.de
info@briefkasten-manufaktur.de
Tel.: +49 5222 807110

Geschäftsführer Oliver Woineck
Ust.ID.Nr. DE303690847
Handelsregister Amtsgericht Lemgo, HRB 8618

The insertion opening measures 35 × 325 mm and is sized for DIN C4 landscape. The mailbox version complies with DIN EN 13724.

Quiet insertion and comfortable removal

The integrated flap damping with a rubber seal reduces impact noise during insertion. The mail retention bar holds items back during removal.

Integrated bell and intercom section

Bell/intercom section according to the selected configuration. The stainless steel doorbell push-button Type 4 is used as the doorbell. Optionally prepared with a speaker grille for the installation of commercially available intercom systems or flush-mounted speakers. (Intercom system/flush-mounted speaker not included). An option with the Comelit Ultra video complete kit is also available.

Quality manufacturing and well thought-out design

The system is manufactured at the Briefkasten Manufaktur in Germany. The construction is designed for straightforward self-installation.

Equipment and product details

Mailbox system

Number of mailboxes 6 individually usable mailboxes
Arrangement 3 × 2
Depth 100 mm
Mailbox material Stainless steel V2A 1.4301
Mailbox finish 240-grit brushed
Bell/intercom section Bell/intercom section integrated

Mail and operation

Insertion opening 35 × 325 mm, suitable for DIN C4 landscape
Standard DIN EN 13724
Insertion flap Noise-dampened by rubber seal
Keys 2 keys with key number per mailbox
Nameplate Interchangeable nameplate beneath the insertion flap
Mail retention bar Integrated per mailbox

Mounting and equipment

Mounting type Surface-mounted
Rain runoff edge Integrated into the construction
Rain canopy Made from stainless steel V2A 1.4301, 240-grit brushed
Side cladding Made from stainless steel V2A 1.4301, 240-grit brushed
Mounting material For wall mounting including mounting rail and fixings (screws + wall plugs)
Manufacture Made in Germany by Briefkasten Manufaktur Lippe

Note on weather protection

Briefkasten Manufaktur Lippe GmbH
Werler Straße 60
32105 Bad Salzuflen

www.briefkasten-manufaktur.de
info@briefkasten-manufaktur.de
Tel.: +49 5222 807110

Geschäftsführer Oliver Woineck
Ust.ID.Nr. DE303690847
Handelsregister Amtsgericht Lemgo, HRB 8618

Mail items are optimally protected from moisture and dirt when fully inserted and with the insertion flap closed. Protruding items may prevent the flap from closing completely.

Note on wall mounting

Before mounting, the load-bearing capacity and condition of the wall must be checked. The fixing must be matched to the system weight and the existing wall construction.

Product properties

Series	BASIC
Number of bell push buttons	6 buttons
Functions	Light button, Intercom
Functional box prepared for manufacturer	GIRA, Busch Jaeger, Siedle, STR Elektronik, ELCOM, TCS, Ritto, ALGO, Telegärtner, Auerswald, Legrand Bticino, Comelit
Number of boxes	with 6 letterboxes
Boxes by volume	Normal > 10 litres
Name labelling	Nameplate
Material	Stainless steel V2A 1.4301
Removal of mail	On the front
Surface/colour	Brushed
Mounting type	Surface-mounted

Dimensions

Height of single box in mm	330.0
Width of single box in mm	355.0
Capacity in litres	12.0 | 17.0
Height of letterbox slot in mm	35.0
Width of letter slot in mm	325.0
Height of letterbox in mm	760.0
Width of letterbox system in mm	1065.0
Total width in mm	1065.0
Depth in mm	100.0 | 150.0
Weight in kg	34

Briefkasten Manufaktur Lippe GmbH
Werler Straße 60
32105 Bad Salzuflen

www.briefkasten-manufaktur.de
info@briefkasten-manufaktur.de
Tel.: +49 5222 807110

Geschäftsführer Oliver Woineck
Ust.ID.Nr. DE303690847
Handelsregister Amtsgericht Lemgo, HRB 8618

More images





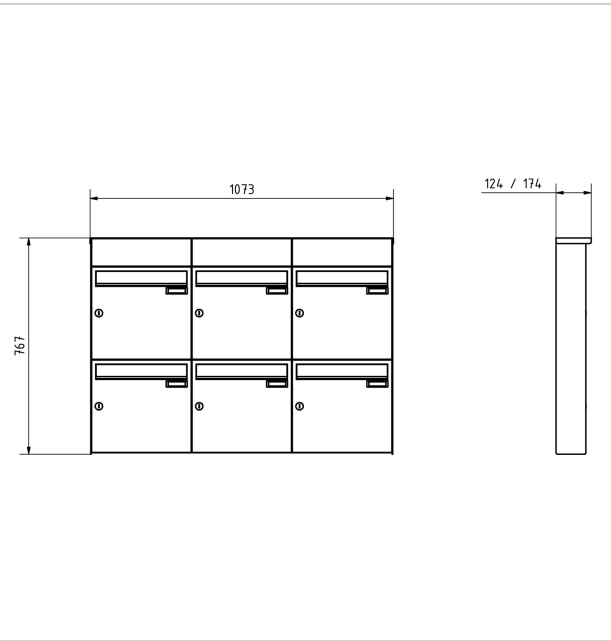



Briefkasten Manufaktur Lippe GmbH
Werler Straße 60
32105 Bad Salzuflen

www.briefkasten-manufaktur.de
info@briefkasten-manufaktur.de
Tel.: +49 5222 807110

Geschäftsführer Oliver Woineck
Ust.ID.Nr. DE303690847
Handelsregister Amtsgericht Lemgo, HRB 8618









Briefkasten Manufaktur Lippe GmbH
Werler Straße 60
32105 Bad Salzuflen

www.briefkasten-manufaktur.de
info@briefkasten-manufaktur.de
Tel.: +49 5222 807110

Geschäftsführer Oliver Woineck
Ust.ID.Nr. DE303690847
Handelsregister Amtsgericht Lemgo, HRB 8618



Briefkasten Manufaktur Lippe GmbH
Werler Straße 60
32105 Bad Salzuflen

www.briefkasten-manufaktur.de
info@briefkasten-manufaktur.de
Tel.: +49 5222 807110

Geschäftsführer Oliver Woineck
Ust.ID.Nr. DE303690847
Handelsregister Amtsgericht Lemgo, HRB 8618