Freestanding parcel box KANT Edition ST-Q - Design Elegance 1 - DB 703 micaceous iron ore | DB 703 iron mica fine texture matt



Product number 303-PK-DB703VA-STQ

Product description

Freestanding parcel box KANT Edition ST-Q - Design Elegance 1 - RAL 7016 anthracite grey

The free-standing KANT Edition parcel box is an innovative solution that combines **elegant design** and functional convenience. With its minimalist design, which features an invisible lock and stylish labelling options, it blends seamlessly into modern living environments. You can rely on **long-lasting quality** thanks to our excellent choice of materials and precise workmanship.

The generous opening allows parcels up to a size of 360 x 250 x 130 mm to be posted, meaning that parcels up to parcel size M can also be posted securely and without any problems. A special highlight is the protective flap, which not only elegantly covers the opening but also the lock and protects it from moisture. Thanks to the integrated lock technology, parcels can only be removed from the bottom of the lock-secured compartment, preventing theft from above. A parcel box for the simple receipt of parcels, parcel receipt independent of the deliverer! Any parcel deliverer (e.g. DHL, DPD, TNT, GLS, Hermes, etc.) can use this parcel box. Thanks to the airlock technology and 85 litre capacity, it is possible to receive several parcels. For daily post, we recommend the KANT letter box in a matching design.

Self-assembly is straightforward thanks to the sophisticated design.

Briefkasten Manufaktur Lippe GmbH
Werler Straße 60
32105 Bad Salzuflen

www.briefkasten-manufaktur.de
info@briefkasten-manufaktur.de
Tel.: +49 5222 807110

Geschäftsführer Oliver Woineck
Ust.ID.Nr. DE303690847
Handelsregister Amtsgericht Lemgo, HRB 8618

- High-quality parcel box made of galvanised steel, powder-coated in DB 703 micaceous iron ore fine structure matt.
- Elegance 1 design: stainless steel trim, 240 grit polished.
- Parcel compartment volume: approx. 85 litres, max. Parcel dimensions: 360 x 250 x 130 mm (WHT), corresponding to parcel size M.
- Large insertion flap with airlock technology for multiple parcel loading.
- Drop-in flap with damping for quiet closing.
- The door can be opened from top to bottom.
- Includes 2 keys with key number.
- Optional name labelling approx. 8-25 mm high.
- Optional house number labelling approx. 100-120 mm high.
- The W 40 mm x D 80 mm uprights are made of 2 mm stainless steel V2A 1.4301, 240 grain polished for setting in concrete or screw mounting.

Important information:

In order to achieve optimum water protection for your parcels, the parcel box or parcel box system should be located under a canopy if possible.

The parcel is only protected from water if it is completely placed in the box and the flap is closed. Parcels that are not fully inserted allow moisture and dirt to enter the parcel box. Water ingress is not a reason for complaint.

Product properties

Material	Steel, galvanised, Stainless steel V2A 1.4301
Series	KANT
Functions	Newspaper compartment, Parcel compartment
Number of boxes	with 1 parcel box, with 1 letterbox
Surface/colour	DB 703 iron mica, Brushed
Mounting type	Free-standing
House number	House number as laser engraving
Name labelling	Laser-engraved
Removal of mail	On the front
Boxes by volume	Jumbo > 30 litres

Briefkasten Manufaktur Lippe GmbH
Werler Straße 60
32105 Bad Salzuflen

www.briefkasten-manufaktur.de
info@briefkasten-manufaktur.de
Tel.: +49 5222 807110

Geschäftsführer Oliver Woineck
Ust.ID.Nr. DE303690847
Handelsregister Amtsgericht Lemgo, HRB 8618

Dimensions

Height of single box in mm	580,0
Width of single box in mm	440,0
Capacity in litres	85
Overall height in mm	1200,0 | 1500,0
Total width in mm	555,0
Depth in mm	350,0
Weight in kg	18
Delivery condition	Supplied in blocks, stand elements/parcel box divided

Dimension drawing

Briefkasten Manufaktur Lippe GmbH
Werler Straße 60
32105 Bad Salzuflen

www.briefkasten-manufaktur.de
info@briefkasten-manufaktur.de
Tel.: +49 5222 807110

Geschäftsführer Oliver Woineck
Ust.ID.Nr. DE303690847
Handelsregister Amtsgericht Lemgo, HRB 8618

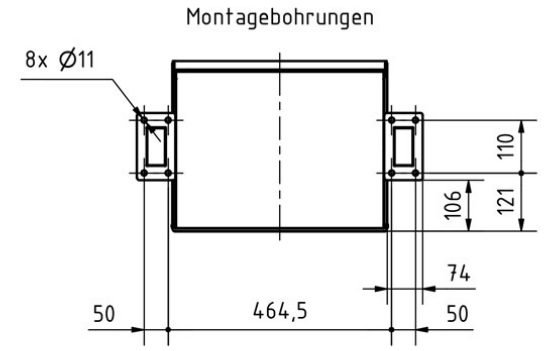

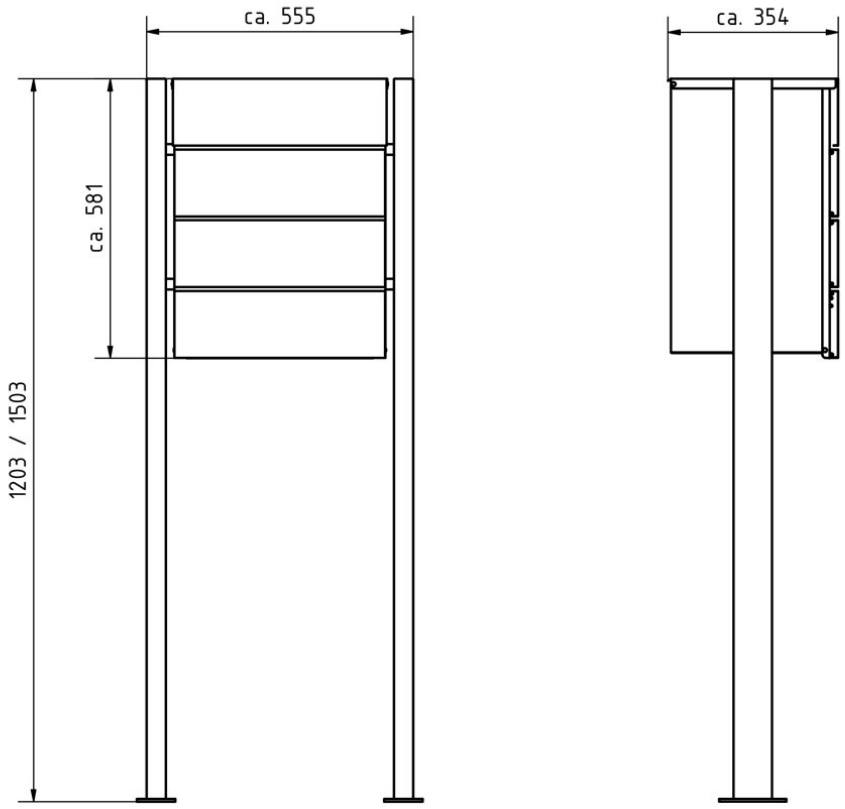

Briefkasten Manufaktur Lippe GmbH
Werler Straße 60
32105 Bad Salzuflen

www.briefkasten-manufaktur.de
info@briefkasten-manufaktur.de
Tel.: +49 5222 807110

Geschäftsführer Oliver Woineck
Ust.ID.Nr. DE303690847
Handelsregister Amtsgericht Lemgo, HRB 8618

More images





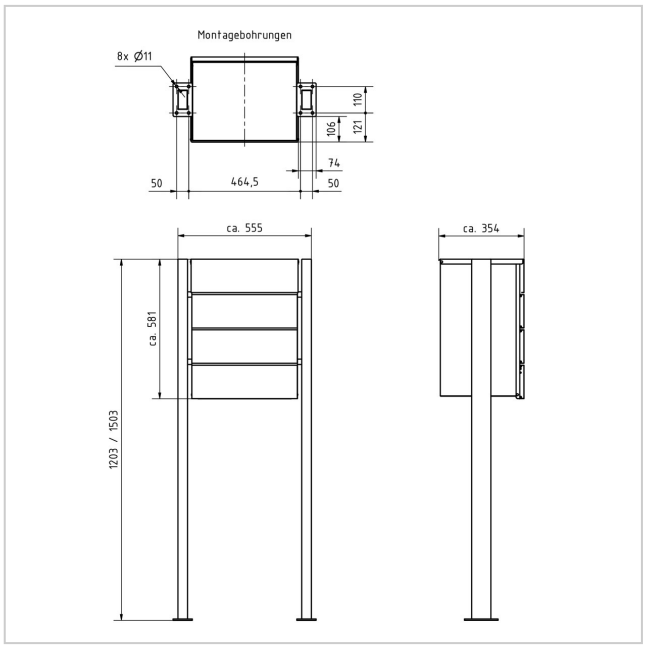



Briefkasten Manufaktur Lippe GmbH
Werler Straße 60
32105 Bad Salzuflen

www.briefkasten-manufaktur.de
info@briefkasten-manufaktur.de
Tel.: +49 5222 807110

Geschäftsführer Oliver Woineck
Ust.ID.Nr. DE303690847
Handelsregister Amtsgericht Lemgo, HRB 8618







Briefkasten Manufaktur Lippe GmbH
Werler Straße 60
32105 Bad Salzuflen

www.briefkasten-manufaktur.de
info@briefkasten-manufaktur.de
Tel.: +49 5222 807110

Geschäftsführer Oliver Woineck
Ust.ID.Nr. DE303690847
Handelsregister Amtsgericht Lemgo, HRB 8618