3-bay freestanding mailbox system Design BASIC 385220 7016 ST-R - RAL 7016 anthracite grey | RAL 7016 Anthracite grey, fine texture, matt | 300x220x385 mm (WxHxD) - ???? Large 25 litres | with 3 mailboxes (1x3)



Product number 385220-7016-3

Product description

Freestanding mailbox system BASIC 385220 for 3 parties – RAL 7016 Anthracite grey

The BASIC 385220 is designed as an exceptionally spacious freestanding mailbox solution for 3 parties. Approximately 25 litres volume per mailbox provide ample space for daily letters, magazines and larger mail items.

The mailboxes are made of galvanised steel and are powder-coated in RAL 7016 Anthracite grey with a fine-textured matt finish. A rain hood and side panels combine the individual mail compartments into a cohesive, linear overall unit.

The freestanding construction allows positioning independent of the house façade – for example at the property entrance, by a driveway or along the access path.

Each compartment features an insertion opening of 35 × 265 mm for DIN C4 items in portrait format. A noise-damping rubber lip reduces impact noise; mail is retrieved from the front via doors that open from left to right. Each mailbox is supplied with two keys bearing a key number and an interchangeable nameplate.

The advantages of the BASIC 385220 at a glance

Massive stainless-steel support posts

Round-tube support posts with approx. 60 mm diameter made of brushed stainless steel V2A 1.4301 form a stable base for the freestanding mailbox system. The robust construction is designed for long-term use at the property entrance.

Large-volume 220 mm version

Briefkasten Manufaktur Lippe GmbH
Werler Straße 60
32105 Bad Salzuflen

www.briefkasten-manufaktur.de
info@briefkasten-manufaktur.de
Tel.: +49 5222 807110

Geschäftsführer Oliver Woineck
Ust.ID.Nr. DE303690847
Handelsregister Amtsgericht Lemgo, HRB 8618

With approx. 300 × 220 × 385 mm per mailbox, the BASIC 385220 offers around 25 litres of mail volume. This is particularly practical with higher mail volumes or longer emptying intervals.

Large insertion opening to DIN EN 13724

The insertion opening of 35 × 265 mm is designed for DIN C4 items in portrait format. Larger envelopes can also be inserted without having to be folded.

Bolt fixing or concreting in

Depending on the version, the stainless-steel support posts are either bolted to a load-bearing foundation or permanently concreted in. This allows the unit to be installed to suit the site-specific conditions.

Robust large-capacity unit Made in Germany

The combination of galvanised steel, large 25-litre mail compartments, massive stainless-steel support posts and an installation-friendly construction makes the BASIC 385220 a particularly robust solution for daily use.

Equipment of the BASIC 385220 mailbox system

Mailbox system

Number of mailboxes 3 separately usable mail compartments
Design Freestanding mailbox system
Mailbox material Galvanised steel
Finish RAL 7016 Anthracite grey fine-textured matt
Mailbox size Approx. 300 × 220 × 385 mm per compartment
Mail volume Approx. 25 litres per mailbox
Manufacture Manufactured in Germany by Briefkasten Manufaktur Lippe

Mail and operation

Insertion opening 35 × 265 mm, suitable for DIN C4 portrait
Insertion flaps With noise-damping rubber lip
Mail retrieval From the front
Door opening From left to right
Keys 2 keys with key number per mailbox
Nameplate Interchangeable nameplate below the insertion flap
Standard Mailboxes in accordance with DIN EN 13724

Support posts and accessories

Support posts Round tube approx. 60 mm made of brushed stainless steel V2A 1.4301
Mounting options Optional for bolt fixing or for concreting in
Anchor bolts Not included with bolt fixing; select suitable anchors for the foundation separately
Rain hood / side panels Galvanised steel, powder-coated in RAL 7016 Anthracite grey fine-textured matt

25 litre mail volume

Briefkasten Manufaktur Lippe GmbH
Werler Straße 60
32105 Bad Salzuflen

www.briefkasten-manufaktur.de
info@briefkasten-manufaktur.de
Tel.: +49 5222 807110

Geschäftsführer Oliver Woineck
Ust.ID.Nr. DE303690847
Handelsregister Amtsgericht Lemgo, HRB 8618

The BASIC 385220 uses the deep mailbox version with approx. 300 × 220 × 385 mm and around 25 litres volume per compartment. The additional volume is particularly suitable for regular letter, magazine and catalogue deliveries as well as for longer emptying intervals.

Installation by concreting in

For the freestanding mailbox system we recommend a sufficiently dimensioned concrete foundation. The stainless-steel support posts must be plumb and permanently anchored in the foundation. Foundation size and embedment depth must be matched to the ground conditions, unit weight and local circumstances.

Bolt fixing to a foundation

For bolt fixing a level and load-bearing concrete foundation is required. Suitable anchor bolts or equivalent fasteners must be selected to suit the substrate and the load on the unit. Anchor bolts are not included in the basic delivery.

Note on weather protection

Mail is best protected from moisture and dirt when items are fully inserted and the insertion flap is closed. Protruding items can prevent the flap from closing completely. Under extreme weather conditions, moisture may enter the mailbox despite compliant construction.

Product properties

Material	Steel, galvanised
Series	BASIC
Name labelling	Nameplate
Mounting type	Free-standing
Surface/colour	RAL 7016 anthracite grey, Brushed
Removal of mail	On the front
Boxes by volume	Large > 16 litres
Number of boxes	with 3 letterboxes

Briefkasten Manufaktur Lippe GmbH
Werler Straße 60
32105 Bad Salzuflen

www.briefkasten-manufaktur.de
info@briefkasten-manufaktur.de
Tel.: +49 5222 807110

Geschäftsführer Oliver Woineck
Ust.ID.Nr. DE303690847
Handelsregister Amtsgericht Lemgo, HRB 8618

Dimensions

Height of single box in mm	220.0
Width of single box in mm	300.0
Capacity in litres	25
Height of letterbox slot in mm	35.0
Width of letter slot in mm	265.0
Height of letterbox in mm	660.0
Width of letterbox system in mm	300.0
Overall height in mm	1200.0 | 1500.0
Total width in mm	465.0
Depth in mm	435.0
Weight in kg	37
Delivery condition	Delivery is in blocks; stand elements / mailbox delivered in separate parts.

Dimension drawing

Briefkasten Manufaktur Lippe GmbH
Werler Straße 60
32105 Bad Salzuflen

www.briefkasten-manufaktur.de
info@briefkasten-manufaktur.de
Tel.: +49 5222 807110

Geschäftsführer Oliver Woineck
Ust.ID.Nr. DE303690847
Handelsregister Amtsgericht Lemgo, HRB 8618

Montagebohrungen

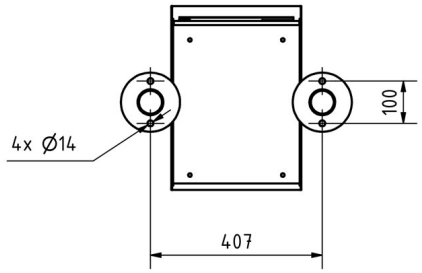

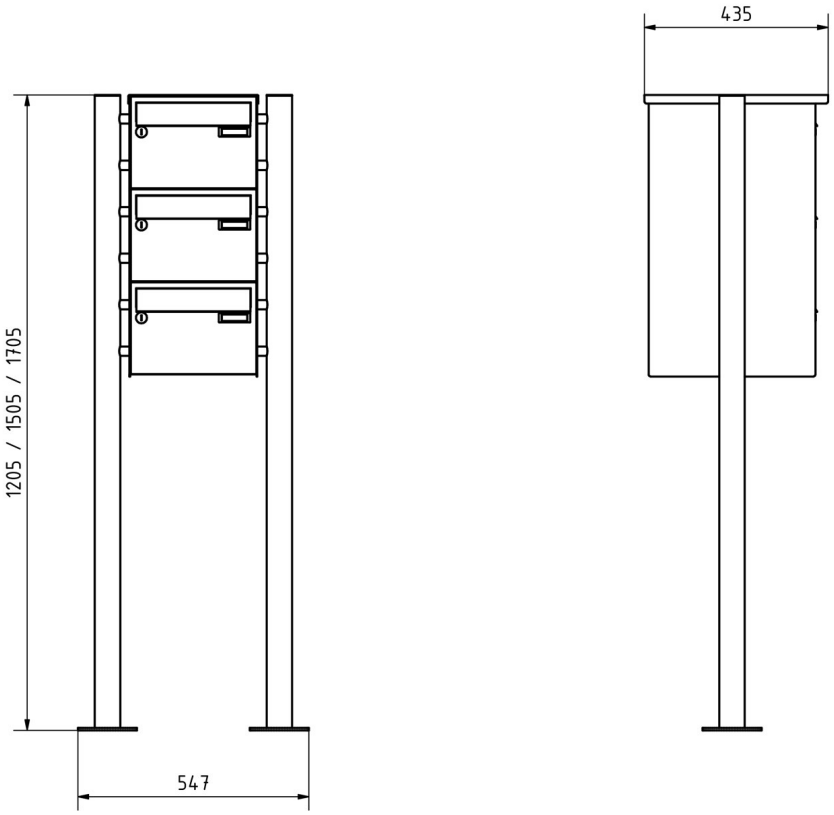

More images







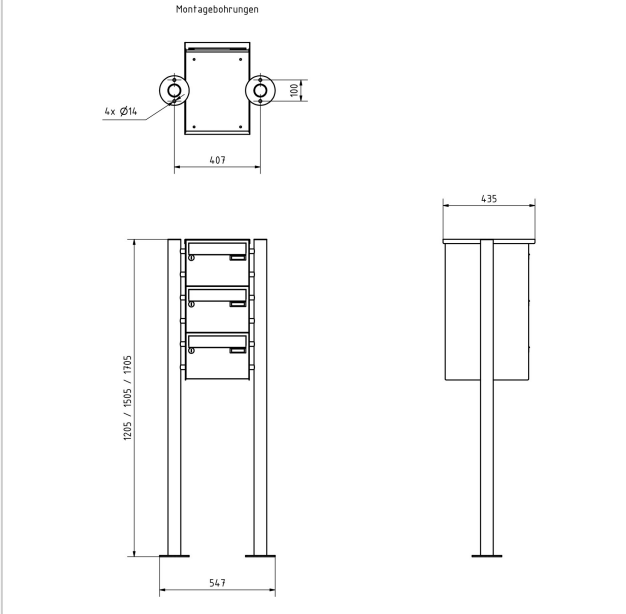

Briefkasten Manufaktur Lippe GmbH
Werler Straße 60
32105 Bad Salzuflen

www.briefkasten-manufaktur.de
info@briefkasten-manufaktur.de
Tel.: +49 5222 807110

Geschäftsführer Oliver Woineck
Ust.ID.Nr. DE303690847
Handelsregister Amtsgericht Lemgo, HRB 8618





Briefkasten Manufaktur Lippe GmbH
Werler Straße 60
32105 Bad Salzuflen

www.briefkasten-manufaktur.de
info@briefkasten-manufaktur.de
Tel.: +49 5222 807110

Geschäftsführer Oliver Woineck
Ust.ID.Nr. DE303690847
Handelsregister Amtsgericht Lemgo, HRB 8618