5-piece design pedestal letterbox GOETHE ST-Q right side with DoorBird video intercom - RAL of your choice | Right | 100mm depth | DoorBird | with 5 letterboxes

Product number 215-STQ-5-SPS-DB-R

Product description

5-piece design pedestal letterbox GOETHE ST-Q right side with DoorBird video intercom - RAL of your choice

High-quality, flush-mounted free-standing letterbox with a seamlessly integrated DoorBird IP video door station D2100E. The DoorBird IP Video Door Station D2100E is the smart solution for your entrance door. The IP video door station can be operated as a stand-alone unit or integrated into an existing smart home platform. Existing, classic installations such as a door chime or an electric door and gate opener can also continue to be used with DoorBird and controlled via the app.

The dimensions of the individual box allow for a capacity of approx. 16 litres, while the large slot guarantees no crumpled mail, even with DIN C4 envelopes and magazines or after several days of absence. The innovative push-key lock is concealed inside the letterbox. The key is simply inserted into the existing opening (no turning required) and the door opens. With the arrangement of the lock, this letterbox is designed in such a way that the removal door prevents the mail from falling towards you. The water drainage edge ensures that the mail inside is optimally protected from the weather. The insertion flap is fitted with high-quality axle dampers, guaranteeing quiet closing and preventing annoying rattling caused by the weather. The interchangeable Plexiglas name plates can be conveniently operated from the front; for an optimum look, we recommend the flush-fitting name plate with laser engraving (see accessories). The 2nd nameplate is fitted with a Yes/No advertising insert.

The letterbox systems in the GOETHE® collection are characterised by the consistent use of stainless steel and aluminium. The result is a very long service life and sustainability. The design has been developed by our own engineers with a view to high flexibility and modularity, simple spare parts assembly and uncomplicated self-assembly. Spare parts for all GOETHE® systems are available directly in our shop.

Thanks to the design, self-assembly is uncomplicated.

Protected utility model according to DPMA file number DE: 20 2021 101 679.5

Briefkasten Manufaktur Lippe GmbH
Werler Straße 60
32105 Bad Salzuflen

www.briefkasten-manufaktur.de
info@briefkasten-manufaktur.de
Tel.: +49 5222 807110

Geschäftsführer Oliver Woineck
Ust.ID.Nr. DE303690847
Handelsregister Amtsgericht Lemgo, HRB 8618

- Freestanding 5 letterbox system made of stainless steel and aluminium.
- Quality production - Made in Germany by Briefkasten Manufaktur Lippe.
- Letterboxes (BH 400x400mm) made of stainless steel 1.4016 (non-rusting magnetic stainless steel), powder-coated in RAL of your choice.
- Innovative push-key lock with 2 keys per letterbox.
- Letters are inserted and removed from the front. Insertion flaps with high-quality axle dampers for very quiet mail insertion.
- The letterboxes comply with DIN/EN 13724. Insertion size (3.5 cm x 36.0 cm) for C4 across, even large letters fit in here without creasing.
- Removal doors open from top to bottom. This prevents the mail from falling towards you.
- Plexiglas nameplate for name labelling and 2nd nameplate advertising yes/no per party.
- Functional box (BH 400x400mm) made of stainless steel 1.4016 (non-rusting magnetic stainless steel), powder-coated in RAL colour of your choice.
- Optimum rain protection thanks to rain run-off edges and a rain roof made of 3 mm aluminium AlMg3 W19, powder-coated in RAL of your choice.
- Side cladding made of 3 mm aluminium AlMg3 W19, powder-coated in RAL of your choice.
- Rear panel made of 1mm stainless steel V2A 1.4301, powder-coated in RAL of your choice.
- The W 40 mm x D 80 mm uprights are made of 2 mm stainless steel V2A 1.4301, powder-coated in RAL colour for setting in concrete or screw mounting.
- Incl. DoorBird IP video door station D2100E + multi-user module MTM18A with illuminated bell buttons or IP video door station D3100E with 7 inch display.

Important information

Camera or intercom preparation

The intercom systems must be connected by an electrician. Please contact your trusted electrician for planning, fitting and installation.

Water protection

To achieve optimum water protection for your mail, the letterbox or letterbox system should be located under a canopy if possible.

The mail is only protected from water if it is fully inserted in the box and the flap is closed. Mail that is not fully inserted allows moisture and dirt to enter the letterbox. This system is protected against the ingress of water in accordance with DIN EN 13724. Water ingress is not a reason for complaint.

Product properties

Surface/colour	RAL 9005 deep black, RAL 3004 crimson red, DB 703 iron mica, RAL 7016 anthracite grey, RAL of your choice (according to colour table), RAL 9007 grey aluminium, RAL 9016 traffic white
Series	GOETHE
Connection technology	LAN
Number of bell push buttons	5 buttons
Functions	Camera, Intercom, Fingerprint, Keypad
Functional box prepared for manufacturer	DoorBird
Name labelling	Nameplate
Material	Aluminium AlMg3 W19, Stainless steel V2A 1.4301, Stainless steel 1.4016 (non-rusting magnetic stainless steel)
Mounting type	Free-standing
Removal of mail	On the front
Number of boxes	with 5 letterboxes
Boxes by volume	Large > 16 litres

Dimensions

Height of single box in mm	400,0
Width of single box in mm	400,0
Capacity in litres	16
Height of letterbox slot in mm	35,0
Width of letter slot in mm	360,0
Height of letterbox in mm	800,0
Width of letterbox system in mm	1200,0
Overall height in mm	1200,0 | 1500,0 | 1700,0 + 23,0
Total width in mm	1288,0
Depth in mm	100.0 + 25.0 Rain roof
Weight in kg	64
Delivery condition	Supplied in blocks, stand elements / letterbox divided

Drawing

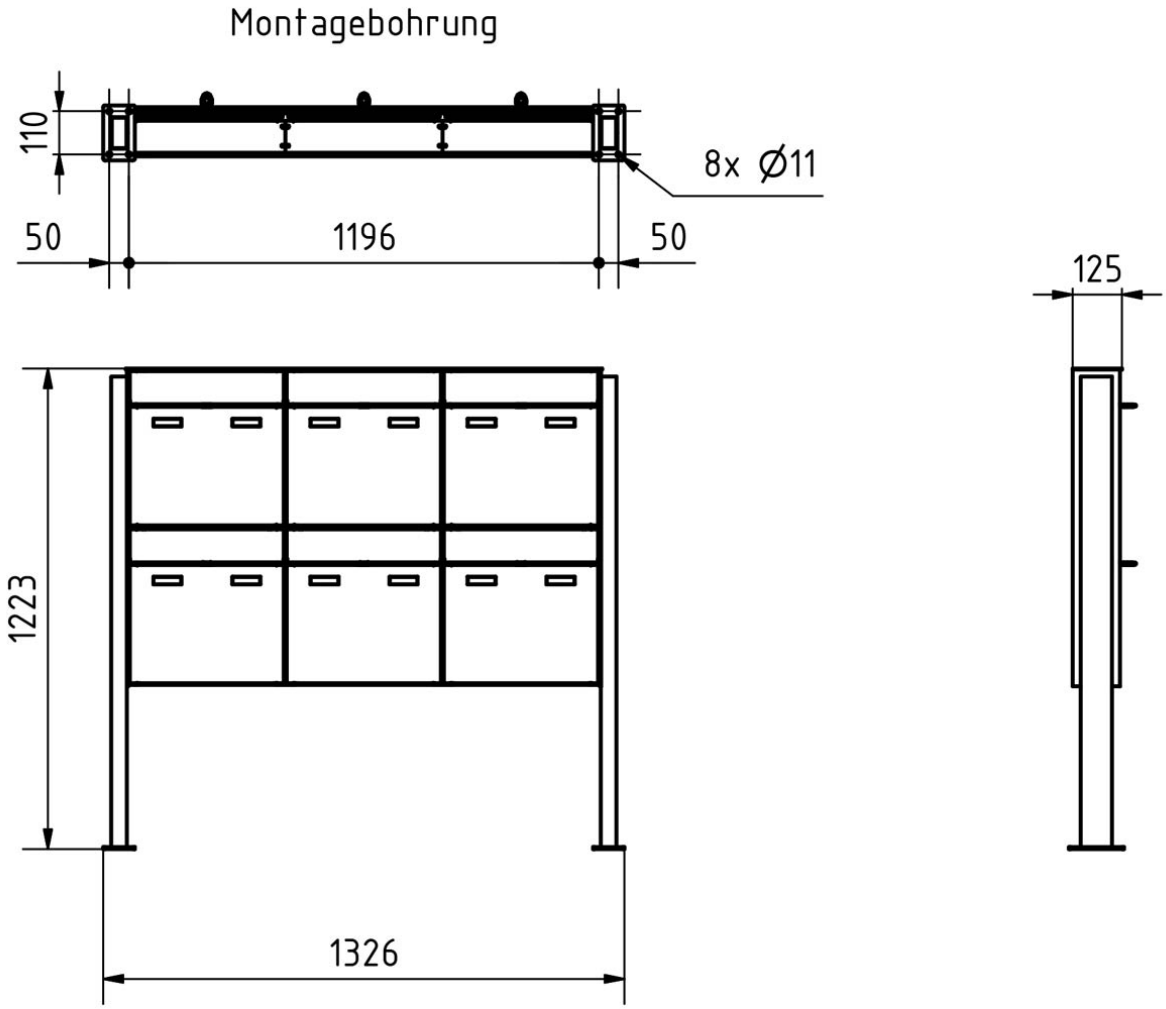

More images

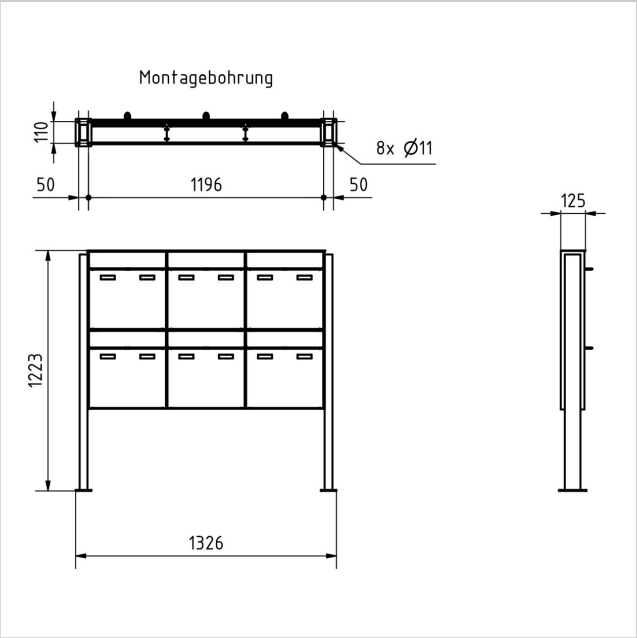
Montagebohrung
110
8x Ø11
50
1196
50
125
1223
1326

Unser TIPP
Flächenbündiges Namensschild - 2-teilig - Trägerblech + Namensschild
Artikel: 789-E-2T (siehe Zubehör)
Grunwald

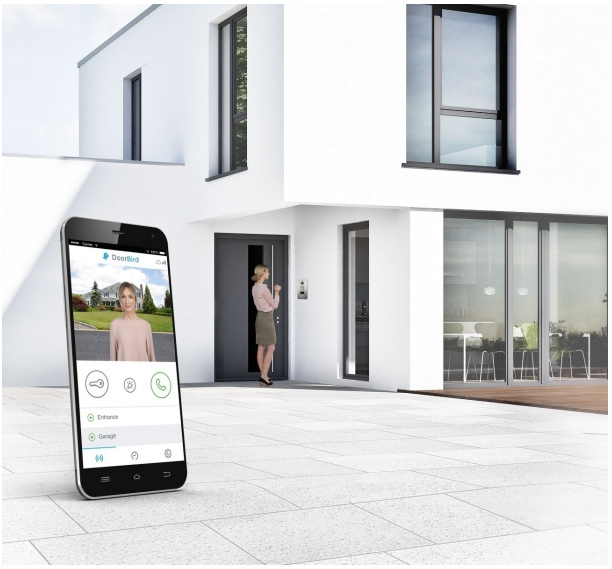

Briefkasten Manufaktur Lippe GmbH
Werler Straße 60
32105 Bad Salzuflen

www.briefkasten-manufaktur.de
info@briefkasten-manufaktur.de
Tel.: +49 5222 807110

Geschäftsführer Oliver Woineck
Ust.ID.Nr. DE303690847
Handelsregister Amtsgericht Lemgo, HRB 8618

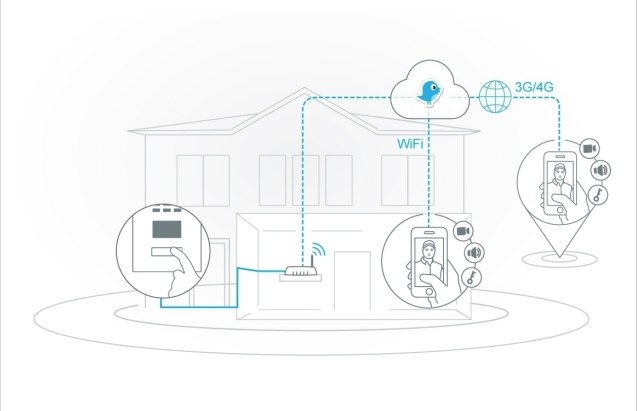
3G/4G
WiFi